GEMÜ 3021

Flow transmitter, turbine

Features

- Simple operation
- Process adaptable
- Freely scalable measuring range
- Integrated flow rectifier
- Short inlet/outlet distances
- Totalizer or batch controller types available
- Relay outputs available

Description

GEMÜ 3021 is a turbine flow transmitter. The keypad at the front of the unit enables simple setting of measurement units, required display values etc.

Technical specifications

- Measuring range - Liquids: 120 to 25000 l/h
- Error of measurement: ± 1 % of final value
- Media temperature: -20 to 80 °C
- Operating pressure : 0 to 10 bar
- Nominal sizes: DN 25 to 50
- Connection types: Union end
- Metering tube materials: PVC-U I PVDF
- Electrical connection types: Plug, design A I M12 plug
- Supply voltages: 24 V DC
- Conformities: EAC

Technical data depends on the respective configuration

further information
webcode: GW-3021

Product description

Item	Name	Materials
1	Measuring transducer housing	PP
2	Housing seal	NBR
3	Plug	PA6
4	Housing screw	1.4303
Media wetted parts		
	Internal turbine components	PVDF
	Body	PVC-U/PVDF
	Bearing /axis	Sapphire/ceramics (AI203)
	Seals	FPM, EPDM

GEMÜ CONEXO

The interaction of valve components that are equipped with RFID chips and an associated IT infrastructure actively increase process reliability.

Thanks to serialization, every valve and every relevant valve component such as the body, actuator or diaphragm, and even automation components, can be clearly traced and read using the CONEXO pen RFID reader. The CONEXO app, which can be installed on mobile devices, not only facilitates and improves the "installation qualification" process, but also makes the maintenance process much more transparent and easier to document. The app actively guides the maintenance technician through the maintenance schedule and directly provides him with all the information assigned to the valve, such as test reports, testing documentation and maintenance histories. The CONEXO portal acts as a central element, helping to collect, manage and process all data.

For further information on GEMÜ CONEXO please visit:
www.gemu-group.com/conexo

Ordering

GEMÜ Conexo must be ordered separately with the ordering option "CONEXO" (see order data).

Installing the RFID chip

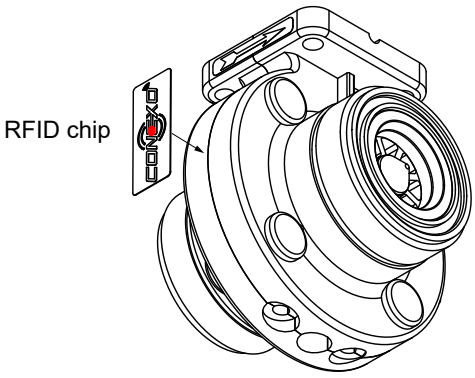

Display position with regard to flow direction Q (code)

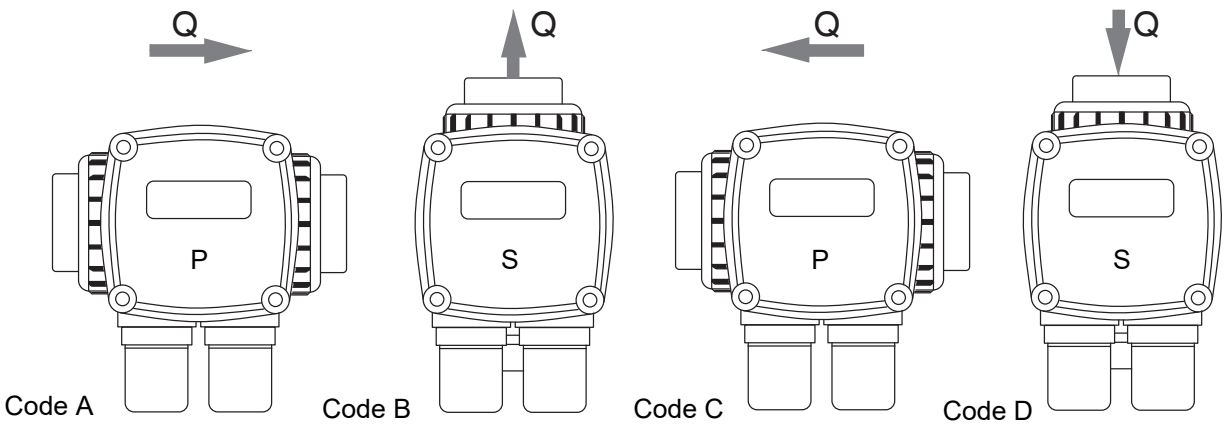

Availability

DN	Connection type code [1]							
	7		7R		33		78	
	Material code [2]							
	1	20	1	20	1	20	1	20
25	X	X	X	-	X	-	X	X
50	X	X	X	-	X	-	X	X

1) **Connection type**
Code 7: Union end with DIN insert (socket)
Code 7R: Union end with Rp threaded socket insert
Code 33: Union end with inch insert - BS (socket)
Code 78: Union end with DIN insert (for IR butt welding)

2) **Material**
Code 1: Body PVC-U grey, internal components PVDF
Code 20: Body PVDF, internal components PVDF

Order data

The order data provide an overview of standard configurations.

Please check the availability before ordering. Other configurations available on request.

Note: A valve specific mounting kit is required for assembly. For designing the mounting kit, the valve type, nominal size, control function and actuator size must be stated.

Order codes

1 Type	Code
Turbine flow transmitter, programmable measurement device	3021

2 DN	Code
DN 25	25
DN 50	50

3 Body configuration	Code
2/2-way body	D

4 Connection type	Code
Union end with DIN insert (socket)	7
Union end with Rp threaded socket insert	7R
Union end with inch insert - BS (socket)	33
Union end with DIN insert (for IR butt welding)	78

5 Material	Code
Body PVC-U grey, internal components PVDF	1
Body PVDF, internal components PVDF	20

6 Seal material	Code
FPM	4
EPDM	14

7 Display position	Code
Display parallel, 0° to flow direction	A
Display vertical, 90° offset to flow direction	B
Display parallel, 180° to flow direction	C
Display vertical, 270° offset to flow direction	D

8 Function	Code
Totalizer, 0/4 - 20 mA and pulse output	T41
Batch controller, 2 relays, remote control inputs and time control	BBT

9 Voltage/frequency	Code
24 V DC	C1

10 CONEXO	Code
without	
Integrated RFID chip for electronic identification and traceability	C

Order example

Order option	Code	Description
1 Type	3021	Turbine flow transmitter, programmable measurement device
2 DN	25	DN 25
3 Body configuration	D	2/2-way body
4 Connection type	7	Union end with DIN insert (socket)
5 Material	1	Body PVC-U grey, internal components PVDF
6 Seal material	4	FPM
7 Display position	A	Display parallel, 0° to flow direction
8 Function	T41	Totalizer, 0/4 - 20 mA and pulse output
9 Voltage/frequency	C1	24 V DC
10 CONEXO		without

Technical data

Medium

Working medium: Corrosive, inert, liquid media which have no negative impact on the physical and chemical properties of the body and seal material.

Max. permissible viscosity: liquid ≤ 120 mm²/s (120cSt)

Temperature

Media temperature:
PVC-U, grey (code 1): 10 to 60 °C
PVDF (code 20): -20 to 80 °C

Storage temperature: 0 to 40 °C

Pressure/temperature correlation

Material	Code	Temperature												
		-20	-10	0	5	10	20	25	30	40	50	60	70	80
		Permissible operating pressure												
PVC-U	**1**	-	-	-	-	10.0	10.0	10.0	8.0	6.0	3.5	1.5	-	-
PVDF	**20**	-	10.0	10.0	10.0	10.0	10.0	10.0	9.0	8.0	7.0	6.3	5.4	4.7

Permissible operating pressure in bar
Temperatures in °C

Product compliance

EMC Directive: 2014/30/EU

Mechanical data

Installation position: Optional

Protection class: IP 65 acc. to EN 60529

Weight:
DN 25: 600 g
DN 50: 1500 g

Installation note: Inlet/outlet distances 5 x DN

Measured data:

DN	Measuring range (adjustable)	Start-up	Pressure loss	Pulse rate (adjustable)
25	120 l/h - 7200 l/h (factory setting 3600 l/h)	≤ 80 l/h	0.1 bar at 3600 l/h	max. 256 pulses/l (factory setting 1 pulse/l)
50	500 l/h - 25000 l/h (factory setting 25000 l/h)	≤ 500 l/h	0.2 bar at 25000 l/h	max. 25 pulses/l (factory setting 1 pulse/l)

Accuracy: ± 1.0 % FS (FS = full scale)

Temperature error: typically 0.2 % / 10 K

Note: Measuring certificate with calibration data is provided in the scope of delivery. Calibration with water 20 °C.

To prevent blockage of the rotor due to particles contained in the medium, an upstream dirt filter (mesh width 100 µm) should be installed!

Electrical data

Power supply

Supply voltage: 18 - 30 V DC

Power consumption: typically 1.0 W

Current consumption: typically 40 mA

Reverse battery protection: Yes

Electrical connection type: Plug design A, DIN EN 175301-803
1 x 5-pin M12 plug (A-coded)

Recommended cable diameter: 8 to 10 mm

Input signals

Input signals: SetBatchNo 1-4, SetBatchQty (batch controller)
Total Count reset (totalizer)
High-Signal: 14 - 30 V DC
Low-Signal: 0 - 8 V DC
Pulse time: ≥ 100 ms
SetQtyFactrTime (batch controller)
High-Signal: 14 - 30 V DC
Low-Signal: 0 - 8 V DC
Resolution: 4 ms

Output signals

Current output

Current signal: 0/4 - 20 mA (adjustable)

Resolution: max. 23 µA (10 bit)

Load resistor: ≤ 500 kΩ

Load dependence: 0.25 %

Pulse output

Type of contact: PNP (U_v-U_{Drop})
1.7 V at 24 V / 5 mA
2.5 V at 24 V / 10 mA
5.0 V at 24 V / 20 mA

typically U_{Drop} Batch end
2 V at 24 V DC / 0.7 A

Pulse pause ratio 1:1

Pulse rate ≤ K-factor / 2 (K-factor adjustable, see test certificate enclosed with the product)

Relay output

Switching voltage:	≤ 36 V DC/30 V AC
Switching current:	< 1 A
Switch rating:	≤ 15 W

Dimensions

Measuring turbine

Code 7, 33

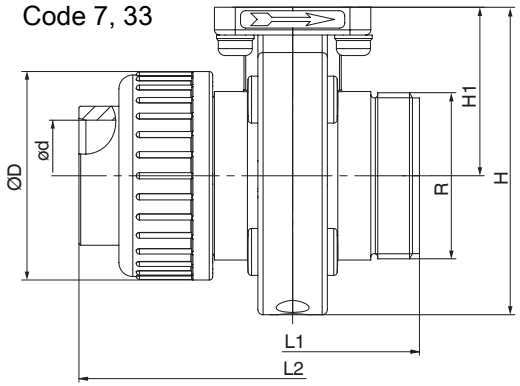

Code 78

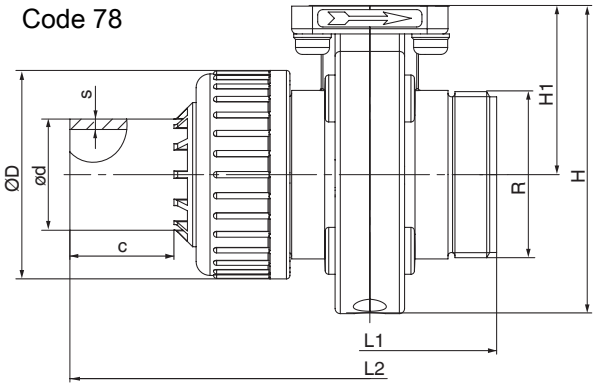

DN	Connection code													
	7, 33, 78					7		33		78				
	Material													
	PVC-U, PVDF					PVC-U	PVDF	PVC-U, PVDF						
	L1	H	H1	øD	R	L2		ød	L2	ød	L2	ød	s	c
25	73	89	49	60	G 1½	123	119	32	123	33.6	191	32	2.4	39
50	105	137	74	103	G 2¾	187	169	63	187	60.3	241	62	3.0	43

Dimensions in mm

Measuring transducer

Dimensions in mm

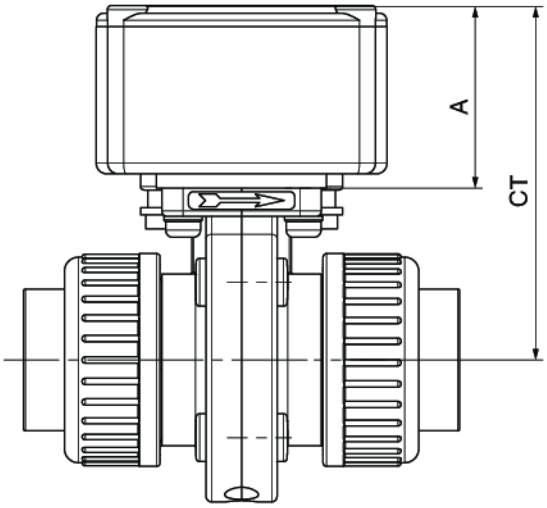

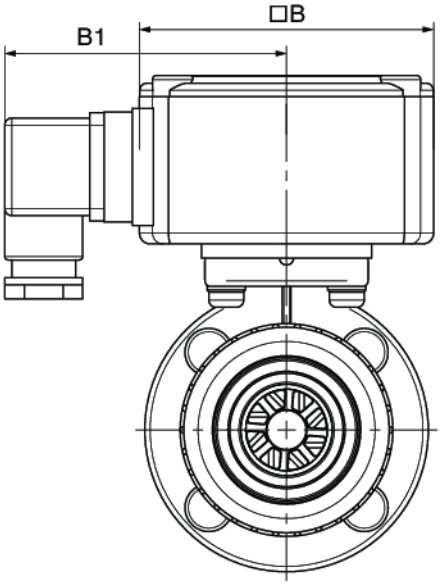

DN	A	B	B1	CT
25	52	83	80	101
50	52	83	80	126

Electrical connection

Totalizer, 0/4 - 20 mA and pulse output (code T41)

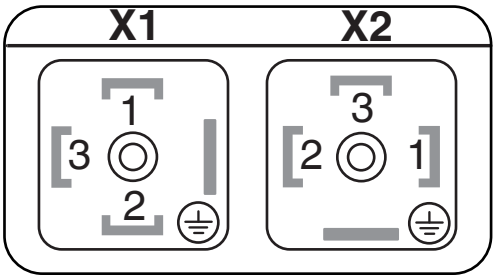

Connection X1

Pin	Description
1	Uv, GND supply voltage
2	Uv, 24 V DC supply voltage
3	Input, 24 V DC, total count reset
PE	n. c.

Connection X2

Pin	Description
1	I-/f-, GND, signal outputs
2	I+, 0/4-20 mA, current output
3	f+, frequency output
PE	n. c.

Batch controller, 2 relays, remote control inputs and time control (code BBT)

2 x connector plug M12x1, 5-pin

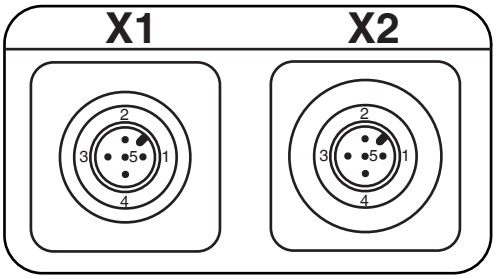

Connection X1

Pin	Signal name	
1	Uv, GND supply voltage	
2	Uv, 24 V DC supply voltage	
3	U input, relay output	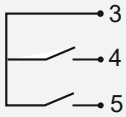
4	Make contact Batch Qty1, relay output	
5	Make contact Batch Qty2, relay output	

Connection X2

Pin	Signal name
1	Uv, GND
2	Start input Batch/time basis
3	Binary code input LSB
4	Binary code input MSB
5	Output Batch end

TÜVRheinland® CERT ISO 14001

TÜVRheinland® CERT ISO 9001

Subject to alteration | 04.2020 | 88048806

GEMÜ Gebr. Müller Apparatebau GmbH & Co. KG
Fritz-Müller-Straße 6-8, 74653 Ingelfingen-Criesbach, Germany
Phone +49 (0)7940 123-0 · info@gemue.de
www.gemu-group.com