GEMÜ R481 Victoria

Pneumatically operated butterfly valve

Features

- Low torques thanks to PTFE coated bushes
- Bubble tight sealing, in accordance with EN 12266-1/P12, leak rate A
- Liner material is easy to read when installed
- Sleek disc design for higher Kv values
- Robust body coating comparable to ISO 12944-6 C5
- Various actuator types can be selected
- Optional accessories are installed, set and tested so they are ready for operation

Description

The GEMÜ R481 Victoria soft seated metal butterfly valve has a metal actuator and is pneumatically operated. Normally Closed, Normally Open and Double Acting control functions are available. Various pneumatic actuators are available. The butterfly valve is available in nominal sizes DN 50 to 300 and in standard installation lengths ISO 5752/20 | EN 558-1/20 | API 609 category A (DIN 3202 K1) in wafer and lug body versions.

Technical specifications

- **Media temperature:** -10 to 160 °C
- **Ambient temperature:** -10 to 70 °C
- **Operating pressure :** 0 to 16 bar
- **Nominal sizes:** DN 50 to 300
- **Body configurations:** Lug I Wafer
- **Connection standards:** AS I ASME I BS I DIN I EN I ISO I JIS
- **Body materials:** EN-GJS-400-15, SG iron material I EN-GJS-400-18-LT, SG iron material
- **Body coating:** Epoxy
- **Liner materials:** EPDM I FKM I NBR I SBR, abrasion resistant I Silicone
- **Disc materials:** 1.4408, investment casting material I 1.4408, polished investment casting material I EN-GJS-400-15, SG iron material
- **Disc coating:** Epoxy I Halar® I Rilsan®
- **Conformities:** ACS I ATEX I Belgaqua I DNV GL I DVGW Gas I EAC I FDA I Functional safety I NSF I Oxygen I Regulation (EC) No. 1935/2004 I TA Luft (German Clean Air Act) I WRAS

Technical data depends on the respective configuration

further information
webcode: GW-R481

Product line

	GEMÜ R480 Victoria	**GEMÜ R481 Victoria**	**GEMÜ R487 Victoria**	**GEMÜ R488 Victoria**
Operation				
With bare shaft	●	-	-	-
Manual	-	-	●	-
Pneumatic	-	●	-	-
Motorized	-	-	-	●
Nominal sizes	DN 50 to 300	DN 50 to 300	DN 50 to 300	DN 50 to 300
Media temperature	-10 to 160 °C	-10 to 160 °C	-10 to 160 °C	-10 to 160 °C
Operating pressure	0 to 16 bar	0 to 16 bar	0 to 16 bar	0 to 16 bar
Connection types				
Flange (lug)	●	●	●	●
Flange (wafer)	●	●	●	●
Conformities				
ACS	●	●	●	●
ATEX	●	●	●	●
Belgaqua	●	●	●	●
DNV GL	●	●	●	●
DVGW Gas	●	●	●	●
EAC	●	●	●	●
FDA	●	●	●	●
Functional safety	●	●	●	●
NSF	●	●	●	●
Oxygen	●	●	●	●
Regulation (EC) No. 1935/2004	●	●	●	●
TA Luft (German Clean Air Act)	●	●	●	●
WRAS	●	●	●	●

Comparison of actuator applications

	GEMÜ ADA/ASR	**GEMÜ DR/SC**	**GEMÜ GDR/GSR**
Industrial sectors			
Chemical processes	●	●	●
Surface finishing	●	●	●
Water treatment	●	●	●
Mechanical engineering	●	●	●
Power generation and environmental systems	●	●	●
Food processing technology	●	●	●
Semiconductor	●	●	●
Medical systems	●	●	●
Pharmaceutical industry	●	●	●

Product description

Construction

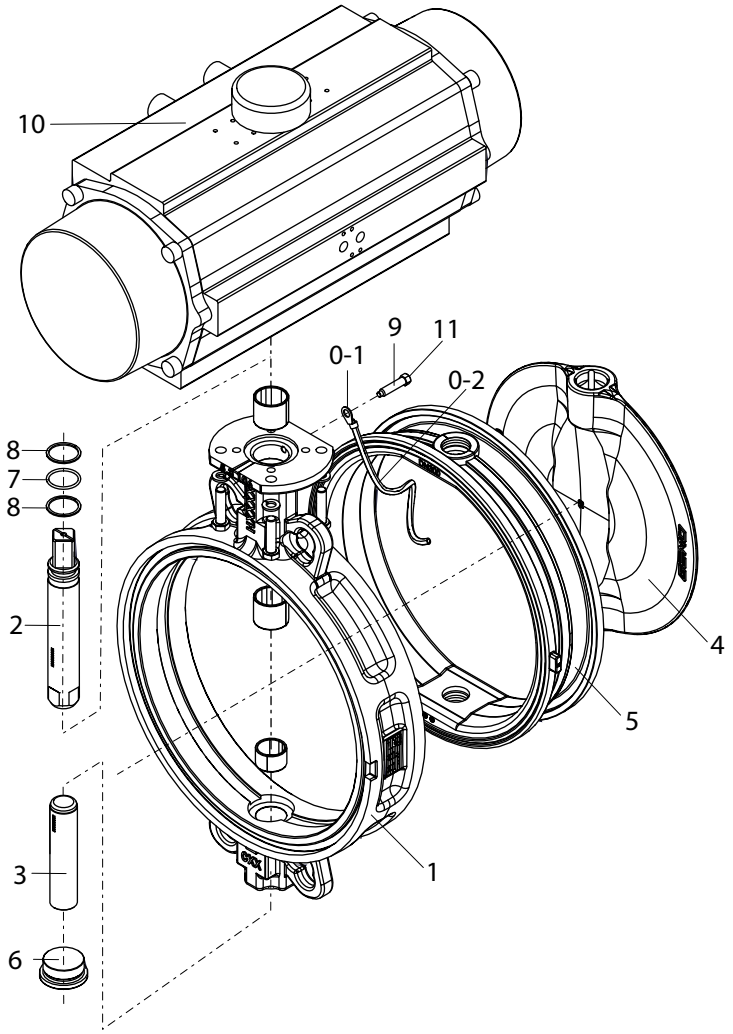

Item	Name	Materials
1	Body	SG iron 5.3106, epoxy coated (RAL 5021)
2	Shaft	1.4021
3	Axis	1.4021
4	Disc	Various materials (see order data)
5	Liner	Various materials (see order data)
6	Threaded plug	1.4408
7	O-ring	NBR
8	Support rings	PTFE
9	Hexagon head bolts	Stainless steel A2-70
0	Earthing kit for ATEX version	
0-1	Cable lug (ATEX version)	
0-2	Stranded wire (ATEX version)	
10	Pneumatic actuator	Aluminium
11	CONEXO RFID chip (see “GEMÜ CONEXO“, page 31)	

Actuator assignment

Design: Liquids +20 °C and control pressure 6 bar

Operating pressure 16 bar (code 3)

GEMÜ type ADA/ASR

DN	Double acting ADA	Code		Single acting ASR	Code
50	ADA0020U F05 Y S14/S11A	BU02AB0		ASR0020U S08 F03F05 Y S09A	AU02FN0
65	ADA0020U F05 Y S14/S11A	BU02AB0		ASR0040U S14 F05 Y S14/S11A	AU04KB0
80	ADA0040U F05 Y S14/S11A	BU04AB0		ASR0080U S14 F05F07 Y S17/S14A	AU08KC0
100	ADA0080U F05F07 Y S17/S14A	BU08AC0		ASR0200U S14 F07F10 Y S17/S14A	AU20KE0
125	ADA0080U F05F07 Y S17/S14A	BU08AC0		ASR0200U S14 F07F10 Y S17/S14A	AU20KE0
150	ADA0130U F05F07 Y S17/S14A	BU13AC0		ASR0300U S14 F07F10 Y S22A	AU30KD0
200	ADA0300U F07F10 Y S22A	BU30AD0		ASR0850U S14 F10F12 Y S27A	AU85KG0

GEMÜ type DR/SC

DN	Double acting DR	Code		Single acting SC	Code
50	DR0015U F03F05NS11A	DU01AW0		SC0015U 8 F03F05NS11A	SU01KW0
65	DR0015U F03F05NS11A	DU01AW0		SC0060U 6 F05F07NS14A	SU06KP0
80	DR0030U F05F07NS14A	DU03AP0		SC0100U 6 F05F07NS17A	SU10KC0
100	DR0060U F05F07NS14A	DU06AP0		SC0150U 6 F05F07NS17A	SU15KC0
125	DR0060U F05F07NS14A	DU06AP0		SC0220U 6 F07F10NS22A	SU22KD0
150	DR0150U F07F10NS22A	DU15AD0		SC0300U 6 F07F10NS22A	SU30KD0
200	DR0220U F07F10NS22A	DU22AD0		SC0600U 6 F10F12NS27A	SU60KG0

GEMÜ type GDR/GSR

DN	Double acting GDR	Code		Single acting GSR	Code
25	GDR0050 F03/05 S11A	HR05AW0		GSR0050 SC5F03/05 S11A	GR05SW0
32	GDR0050 F03/05 S11A	HR05AW0		GSR0065 SC5F05/07 S14A	GR06SP0
40	GDR0050 F03/05 S11A	HR05AW0		GSR0065 SC5F05/07 S14A	GR06SP0
50	GDR0050 F03/05 S11A	HR05AW0		GSR0065 SC5F05/07 S14A	GR06SP0
65	GDR0050 F03/05 S11A	HR05AW0		GSR0075 SC5F05/07 S14A	GR07SP0
80	GDR0065 F05/07 S14A	HR06AP0		GSR0085 SC5F05/07 S14A	GR08SP0
100	GDR0075 F05/07 S14A	HR07AP0		GSR0115 SC5F07/10 S17A	GR11SE0
125	GDR0085 F05/07 S17A	HR08AC0		GSR0125 SC5F07/10 S17A	GR12SE0
150	GDR0100 F07/10 S17A	HR10AE0		GSR0140 SC5F10/12 S22A	GR14SA0
200	GDR0125 F07/10 S22A	HR12AD0		GSR0180 S14F10/14 S27A	GR18KB0

Operating pressure 10 bar (code 2)

GEMÜ type ADA/ASR

DN	Double acting ADA	Code		Single acting ASR	Code
250	ADA0500U F10 Y S22A	BU50AF0		ASR1200U S14 F10F14 Y S36A	A12UKH0
300	ADA0500U F10 Y S22A	BU50AF0		ASR1200U S14 F10F14 Y S36A	A12UKH0

GEMÜ type DR/SC

DN	Double acting DR	Code		Single acting SC	Code
250	DR0300U F07F10NS22A	DU30AD0		SC0900U 6 F10F12NS27A	SU90KG0
300	DR0300U F07F10NS22A	DU30AD0		SC0900U 6 F10F12NS27A	SU90KG0

GEMÜ type GDR/GSR

DN	Double acting GDR	Code		Single acting GSR	Code
250	GDR0125 F07/10 S22A	HR12AD0		GSR0180 S14F10/14 S27A	GR18KB0
300	GDR0125 F07/10 S22A	HR12AD0		GSR0180 S14F10/14 S27A	GR18KB0

Operating pressure 3 bar (code 0)

GEMÜ type ADA/ASR

DN	Double acting ADA	Code		Single acting ASR	Code
200	ADA0200U F07F10 Y S17/S14A	BU20AE0		ASR0500U S14 F10 Y S22A	AU50KF0
250	ADA0200U F07F10 Y S17/S14A	BU20AE0		ASR0500U S14 F10 Y S22A	AU50KF0
300	ADA0300U F07F10 Y S22A	BU30AD0		ASR0850U S14 F10F12 Y S27A	AU85KG0

GEMÜ type DR/SC

DN	Double acting DR	Code		Single acting SC	Code
200	DR0150U F07F10NS22A	DU15AD0		SC0450U 6 F10F12NS27A	SU45KG0
250	DR0150U F07F10NS22A	DU15AD0		SC0450U 6 F10F12NS27A	SU45KG0
300	DR0220U F07F10NS22A	DU22AD0		SC0600U 6 F10F12NS27A	SU60KG0

GEMÜ type GDR/GSR

DN	Double acting GDR	Code		Single acting GSR	Code
200	GDR0100 F07/10 S17A	HR10AE0		GSR0140 SC5F10/12 S22A	GR14SA0
250	GDR0100 F07/10 S17A	HR10AE0		GSR0160 SC5F10/12 S22A	GR16SA0
300	GDR0115 F07/10 S17A	HR11AE0		GSR0180 S14F10/14 S27A	GR18KB0

Product conformities

	Approved designs			Special function (code)
	Disc material	Liner material	Liner fixing	
Drinking water				
ACS	CF8M, 1.4408 (code A) CF8M, 1.4408 polished (code B) Super Duplex, 1.4469 (code D) EN-GJS-400-15 (GGG-40), epoxy coated (code E) EN-GJS-400-15, GGG40 Rilsan® PA11 coated (code R)	EPDM (code W)	All versions	A
Belgaqua	CF8M, 1.4408 (code A) CF8M, 1.4408 polished (code B) Super Duplex, 1.4469 (code D)	EPDM (code W)	Loose (code L)	B
DVGW Water	CF8M, 1.4408 (code A) CF8M, 1.4408 polished (code B)	EPDM (code W)	Loose (code L)	D
NSF	CF8M, 1.4408 (code A) Super Duplex, 1.4469 (code D)	EPDM (code W)	All versions	N
WRAS	CF8M, 1.4408 (code A) CF8M, 1.4408 polished (code B) Super Duplex, 1.4469 (code D)	EPDM (code W)	All versions	W
Food				
FDA	CF8M, 1.4408 (code A) CF8M, 1.4408 polished (code B) Super Duplex, 1.4469 (code D)	EPDM-AB/E (code G) EPDM-AB/W (code I) EPDM, white (code M) NBR (W) (code U) EPDM-HT (code Z)	All versions	no order code required
Regulation 1935/2004	CF8M, 1.4408 polished (code B)	EPDM, white (code M) NBR (W) (code U) EPDM-AB/W (code I)	All versions	no order code required
Gas				
DVGW Gas	CF8M, 1.4408 (code A) CF8M, 1.4408 polished (code B)	NBR (code J)	Loose (code L)	G
Oxygen				
Oxygen	CF8M, 1.4408 (code A) CF8M, 1.4408 polished (code B)	EPDM (code E)	All versions	O
Ship approval				
DNV GL	All materials	All materials	All versions	S
Explosion protection				
ATEX internal and external	CF8M, 1.4408 (code A) CF8M, 1.4408 polished (code B) Super Duplex, 1.4469 (code D) 2.0975 / CC333G (code G) 1.4435 / ASTM A351 / CF3M / AISI 316L (code I)	EPDM (code E)	All versions	Y
ATEX external	All materials	All materials	All versions	X

	Approved designs			Special function (code)
	Disc material	Liner material	Liner fixing	
Functional safety				
Functional safety	All materials	All materials	All versions	S

Other features are not relevant for the product conformities

Availabilities - Type of design

Type of design (code) [1]	
0101	All except liner code V, EPDM-HT code Z and silicone code S
1782	Only disc material code B

All other types of design can be freely combined.

1) **Type of design**
Code 0101: Media wetted area cleaned to ensure suitability for paint applications, parts sealed in plastic bag
Code 1782: Stainless steel valve disc, mechanically polished to 1.6 µm and electropolished, spigot internally polished to 1.6 µm

Order data

Other configurations available on request. Please check the availability with GEMÜ before ordering.

Products ordered with **bold marked ordering options** are so-called preferred series. Depending on the nominal size, these are available more quickly.

Order codes

1 Type	Code
Butterfly valve, pneumatically operated, body with C5-M coating (min. 250µm) and integrated leakage groove, blow-out proof shaft with dust protection, multiple bearings through PTFE bushing, multiple sealing system with insertion slope, material easy to read when installed	R481

2 DN	Code
DN 50	50
DN 65	65
DN 80	80
DN 100	100
DN 125	125
DN 150	150
DN 200	200
DN 250	250
DN 300	300

3 Body configuration	Code
Flange-mounted design (lug), face-to-face dimension FTF EN 558 series 20	L
Intermediate flange design (wafer), face-to-face dimension FTF EN 558 series 20	W

4 Operating pressure	Code
3 bar	0
6 bar	**1**
10 bar	2
16 bar	**3**

5 Connection type	Code
PN 6 / flange EN 1092, face-to-face dimension FTF EN 558 series 20	1
PN 10 / flange EN 1092, face-to-face dimension FTF EN 558 series 20	2
PN 16 / flange EN 1092, face-to-face dimension FTF EN 558 series 20	3
ANSI B16.5, Class 150, face-to-face dimension FTF EN 558 series 20	D
Flange BS 10 Tab E, face-to-face dimension FTF EN 558, series 20	S
Flange AS 2129 Tab D, face-to-face dimension FTF EN 558, series 20	T
Flange AS 2129 Tab E, face-to-face dimension FTF EN 558, series 20	U
Flange BS 10 Tab D, face-to-face dimension FTF EN 558, series 20	H
JIS 10 K, face-to-face dimension FTF EN 558, series 20	G

5 Connection type	Code
JIS 16 K, face-to-face dimension FTF EN 558, series 20	J

6 Body material	Code
EN-GJS-400-15 (GGG-40), epoxy-coated 250 µm	2
EN-GJS-400-18-LT (GGG-40.3), epoxy coated 250 µm	3

7 Disc material	Code
1.4408	**A**
1.4408, polished, roughness Ra 0.6-3.2, except disc marking	B
1.4408, Halar coated	**C**
1.4469, super duplex	**D**
EN-GJS-400-15 (GGG-40), epoxy coated	**E**
EN-GJS-400-15 (GGG-40), HALAR coated	P
EN-GJS-400-15 (GGG-40), RILSAN PA11 coated	R
2.0975/CC333G	G
1.4435 / ASTM A351 / CF3M / AISI 316L	I

8 Shaft material	Code
1.4021	1

9 Shut-off seal material	Code
EPDM-HT-AB/T (abrasion resistant)	B
EPDM	**E**
SBR-AB/P (abrasion resistant)	F
EPDM-AB/E (abrasion resistant)	G
CSM	H
EPDM (FDA certification), white-AB/W	I
NBR (DVGW Gas certification)	J
EPDM (FDA certification), white	M
NBR	**N**
FKM +	O
EPDM-SHT (steam)	T
NBR (FDA certification), white	U
FKM	**V**
EPDM (drinking water compliant)	**W**
EPDM-HT (FDA certification)	**Z**

10 Liner fixing	Code
Liner bonded into body	B
Loose liner	L

11 Type of design	Code
Without	
Media wetted area cleaned to ensure suitability for paint applications, parts sealed in plastic bag	0101
Valve free of oil and grease, media wetted area cleaned and packed in PE bag	0107

11 Type of design	Code
Stainless steel valve disc, mechanically polished to 1.6 µm and electropolished, spigot internally polished to 1.6 µm	1782
Butterfly valve body powder coated, RAL 5015, sky blue	1892
Butterfly valve body powder coated, RAL 1023, traffic yellow	1925
Mounting parts in A4 quality. Caution! Danger of galling! Customer must provide for this!	5143
Thermal separation between actuator and valve body via mounting kit	5222
Thermal separation between actuator and valve body via dew point barrier	5226
Alu product label, black anodized, lasered marking, riveted to the body	6061

12 Special version	Code
Without	
ACS certification	A
BELGAQUA certification	B
DVGW Water certification	D
European origin	E
DVGW Gas approval (only valid in conjunction with a suitable manual, pneumatic or motorized actuator)	G

12 Special version	Code
NSF 61 water certification	N
Oxygen	O
DNV GL certification	S
WRAS certification	W
ATEX certification	X
ATEX certification (in the piping system)	Y

13 Control function	Code
Normally closed (NC)	1
Normally open (NO)	2
Double acting (DA)	3
Normally closed (NC), actuator mounted across the piping	Q
Double acting (DA), actuator mounted across the piping	T
Normally open (NO), actuator mounted across the piping	U

14 Actuator version	Code
Actuator version (see “Actuator assignment“, page 5)	

15 CONEXO	Code
Without	
Integrated RFID chip for electronic identification and traceability	C

Order example - standard version

Ordering option	Code	Description
1 Type	R481	Butterfly valve, pneumatically operated, body with C5-M coating (min. 250µm) and integrated leakage groove, blow-out proof shaft with dust protection, multiple bearings through PTFE bushing, multiple sealing system with insertion slope, material easy to read when installed
2 DN	80	DN 80
3 Body configuration	W	Intermediate flange design (wafer), face-to-face dimension FTF EN 558 series 20
4 Operating pressure	3	16 bar
5 Connection type	3	PN 16 / flange EN 1092, face-to-face dimension FTF EN 558 series 20
6 Body material	2	EN-GJS-400-15 (GGG-40), epoxy-coated 250 µm
7 Disc material	A	1.4408
8 Shaft material	1	1.4021
9 Shut-off seal material	E	EPDM
10 Liner fixing	L	Loose liner
11 Type of design		Without
12 Special version		Without
13 Control function	1	Normally closed (NC)
14 Actuator version	SU10KC	Actuator, pneumatic, single acting, clockwise rotation, spring closing, SC0100U 6F05/07S17D11
15 CONEXO		Without

Technical data

Medium

Working medium: Gaseous and liquid media which have no negative impact on the physical and chemical properties of the disc and seat material.

Temperature

Media temperature: -10 — 160 °C

Depending on the liner and disc material or the type of liner fixing

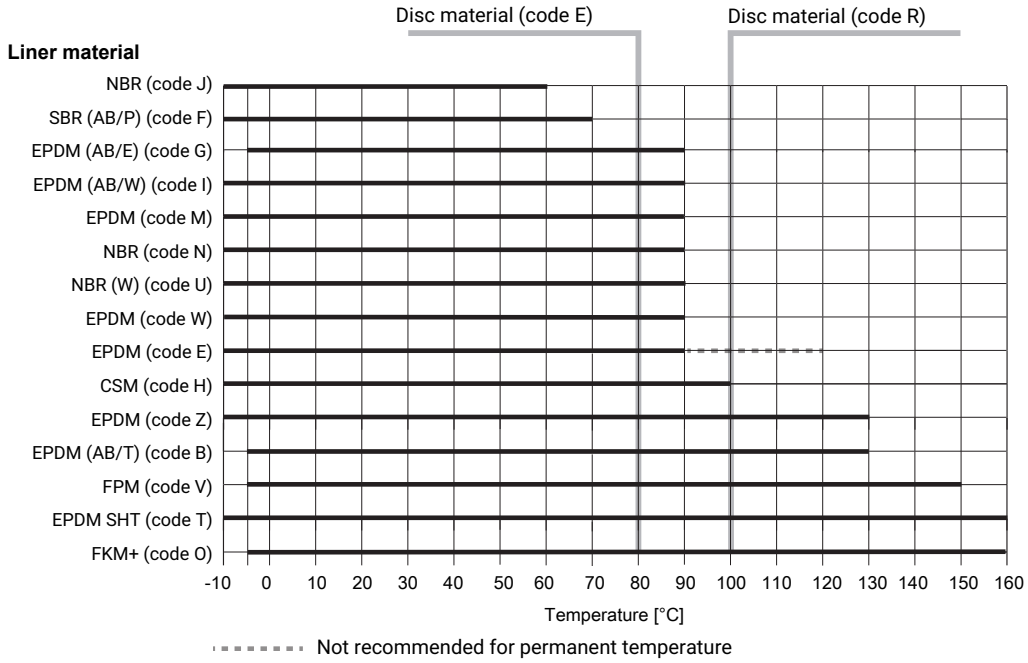

FKM material not suitable for water/steam applications above 100 °C,
Observe Pressure/Temperature diagram.

Ambient temperature: -10 — 70 °C

Storage temperature: -20 — 40 °C

Pressure

Operating pressure: 0 — 16 bar

Use as end-of-line valve
DN 50 – 200: 10 bar
DN 250, 300: 6 bar

Vacuum: Can be used up to a vacuum of 800 mbar (abs) with replaceable liner or with bonded liner up to a vacuum of 2 mbar (abs) through a leakage rate at 10^{-3} [mbar l / sec]

These values apply to room temperature and air. The values may deviate for other media and other temperatures.

Pressure/temperature diagram:

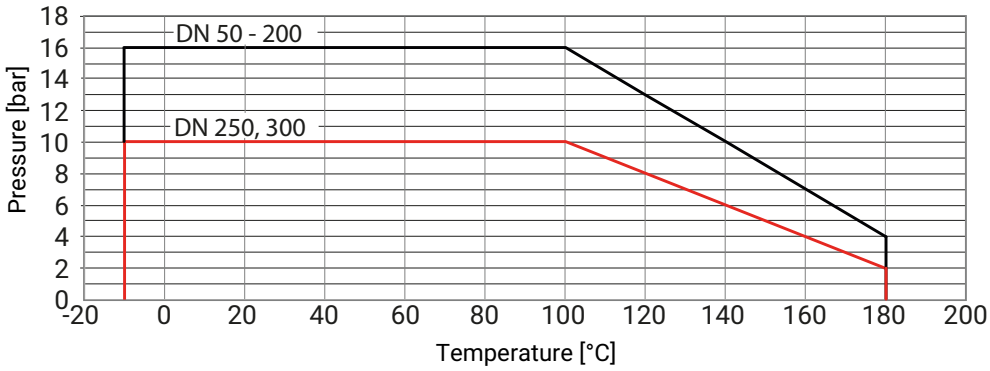

Pressure rating:

PN 3
PN 6
PN 10
PN 16

Control pressure:

6 — 8 bar

Kv values:

DN	Kv values at opening angle							
	20°	30°	40°	50°	60°	70°	80°	90°
50	3.0	9.0	20.0	33.0	65.0	110.0	124.0	125.0
65	9.0	15.0	30.0	64.0	118.0	195.0	214.0	222.0
80	19.0	40.0	66.0	117.0	196.0	321.0	353.0	363.0
100	29.0	75.0	137.0	213.0	316.0	487.0	584.0	618.0
125	48.0	100.0	185.0	315.0	550.0	895.0	1060.0	1120.0
150	60.0	150.0	281.0	450.0	789.0	1280.0	1630.0	1730.0
200	110.0	281.0	472.0	759.0	1480.0	2880.0	3710.0	3900.0
250	200.0	444.0	738.0	1190.0	2110.0	3880.0	5180.0	5410.0
300	250.0	682.0	1060.0	1670.0	3120.0	6360.0	8620.0	8930.0

Kv values in m³/h
When the opening angle is below 30° no regulation should be made!

Product conformity

Machinery Directive:	2006/42/EC
Pressure Equipment Directive:	2014/68/EU
Food:	FDA Regulation (EC) No. 1935/2004
Drinking water:	ACS WRAS Belgaqua NSF
Oxygen:	BAM compliant, the product is suitable for application with oxygen
Ship approval:	DNV GL
Explosion protection:	ATEX (2014/34/EU), order code Special version X and Y
ATEX marking:	**Assessment of the body** Special function code X Gas: Ⓔx II -/2 G Ex h -/IIB T6...T3 -/Gb X Dust: Ⓔx II -/2D Ex h -/IIIC T150°C -/Db X Special function code Y Gas: Ⓔx II 2 G Ex h IIC/IIB T6 ... T3 Gb X Dust: Ⓔx II 2 D Ex h IIIC T150 °C Db X **Actuator type ADA/ASR** Gas: Ⓔx II 2 G Ex h IIC T6 Gb Dust: Ⓔx II 2 D Ex h IIIC T60ºC Db **Actuator type DR/SC** Gas: Ⓔx II 2 G Ex h IIC T6...T3 Gb X Dust: Ⓔx II 2 D Ex IIIC T85°C ... T165°C Db X

Mechanical data

Torques:

DN	PS			
	3 bar	6 bar	10 bar	16 bar *
50	3.0	5.0	7.0	9.0
65	8.0	10.0	13.0	15.0
80	10.0	15.0	20.0	25.0
100	15.0	20.0	30.0	40.0
125	25.0	35.0	45.0	60.0
150	40.0	50.0	80.0	100.0
200	-	-	-	160.0
250	-	-	200.0	-
300	-	-	330.0	-

Torques in Nm

* Standard
Working medium water (20 °C) and optimal operating conditions

Weight:

Butterfly valve

DN	Wafer	Lug
50	1.7	2.2
65	2.5	2.9
80	3.2	4.4
100	4.4	6.2
125	5.9	8.1
150	7.7	10.1
200	13.9	18.4
250	19.6	28.7
300	27.3	36.8

Weights in kg

Actuator type ADA/ASR

Type	ADA	ASR
0020U	1.4	1.5
0040U	2.1	2.3
0080U	3.0	3.7
0130U	3.8	4.8
0200U	5.6	7.3
0300U	8.5	10.8
0500U	11.2	15.4
0850U	16.9	22.2
1200U	25.8	34.3

Weights in kg

Actuator DR/SC

Type	DR	SC
0015U	1.0	1.1
0030U	1.6	1.7
0060U	2.7	3.1
0100U	3.7	4.3
0150U	5.2	6.1
0220U	8.0	9.3
0300U	9.8	12.0
0450U	-	17.0
0600U	-	22.0
0900U	-	33.0

Weights in kg

Weight:

Actuator type GDR/GSR

Type	GDR	GSR
0050	1.1	1.2
0065	1.5	1.8
0075	2.6	3.2
0085	3.4	4.3
0100	5.1	6.6
0115	8.0	10.6
0125	10.0	13.4
0140	11.0	17.2
0160	19.5	24.4
0180	26.0	37.5

Weights in kg

Dimensions

Actuator dimensions

ADA/ASR

Type 00010 - 4000U

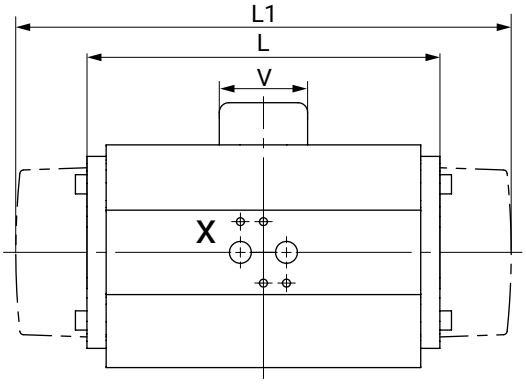

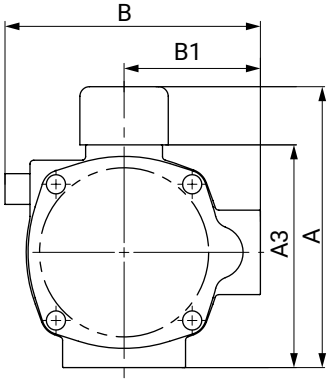

Type 00010 - 1750U

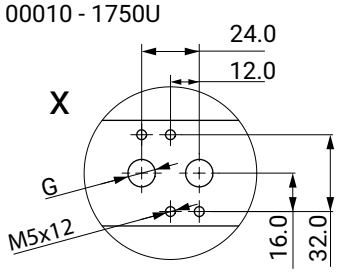

Type 2100U - 4000U

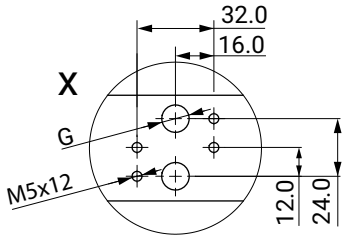

Type 00010 - 0850U

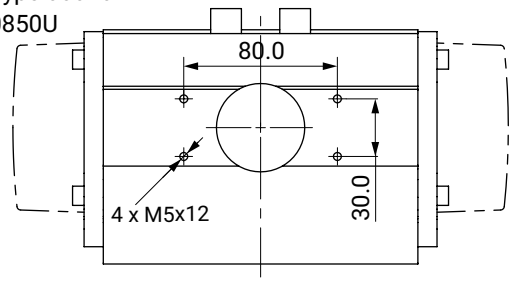

Type 00010 - 4000U

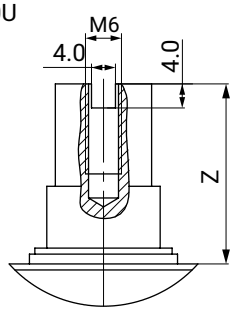

Type 1200U - 4000U

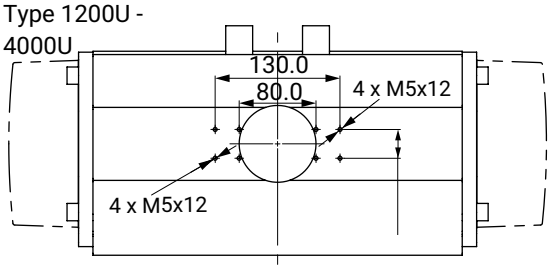

Type	A	A3	B	B1	G	L	L1	V	Z
0020U	96.0	66.0	76.0	48.0	G1/4"	145.0	163.0	40.0	30.0
0040U	115.0	85.0	91.0	56.0	G1/4"	158.0	195.0	40.0	30.0
0200U	165.0	135.0	135.5	78.0	G1/4"	225.0	299.0	40.0	30.0
0500U	199.0	169.0	173.0	96.0	G1/4"	304.0	397.0	40.0	30.0
0850U	221.0	191.0	191.5	106.0	G1/4"	372.0	473.0	40.0	30.0
1200U	249.0	219.0	212.5	116.0	G1/4"	439.0	560.0	65.0	30.0

Dimensions in mm

DR/SC

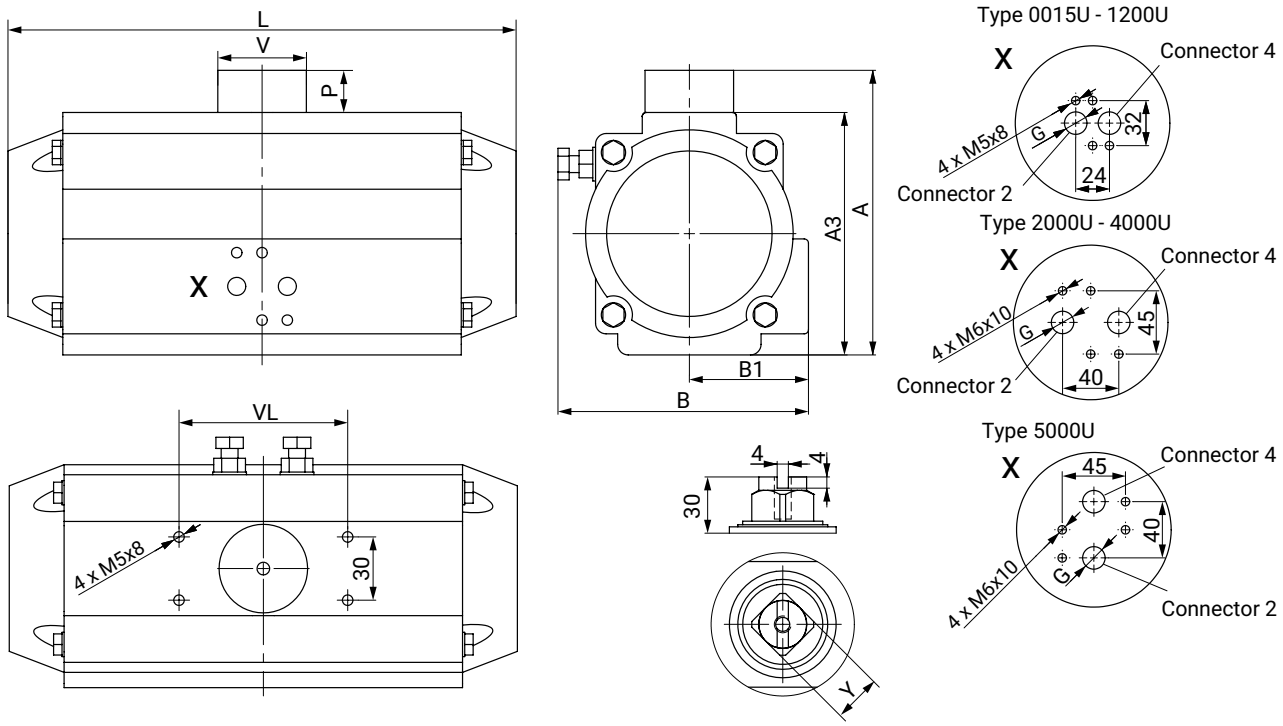

Type	A	A3	B	B1	V	VL	G	P	L	Y
0015U	89.0	69.0	72.0	43.0	42.0	80.0	G1/8"	20.0	136.0	11.0
0030U	105.0	85.0	84.5	48.5	42.0	80.0	G1/8"	20.0	153.5	11.0
0060U	122.0	102.0	93.0	50.5	42.0	80.0	G1/8"	20.0	203.5	17.0
0100U	135.0	115.0	106.0	56.5	42.0	80.0	G1/8"	20.0	241.0	17.0
0150U	147.0	127.0	118.5	63.0	42.0	80.0	G1/4"	20.0	259.0	17.0
0220U	175.0	145.0	136.0	72.0	58.0	80.0	G1/4"	30.0	304.0	27.0
0300U	187.0	157.0	146.5	77.0	58.0	80.0	G1/4"	30.0	333.0	27.0
0450U	207.0	177.0	166.0	86.0	67.5	80.0	G1/4"	30.0	394.5	27.0
0600U	226.0	196.0	181.0	93.0	67.5	80.0	G1/4"	30.0	422.5	27.0
0900U	270.5	220.5	200.0	101.0	80.0	130.0	G1/4"	50.0	474.0	36.0

Dimensions in mm

GDR/GSR

Type G0032

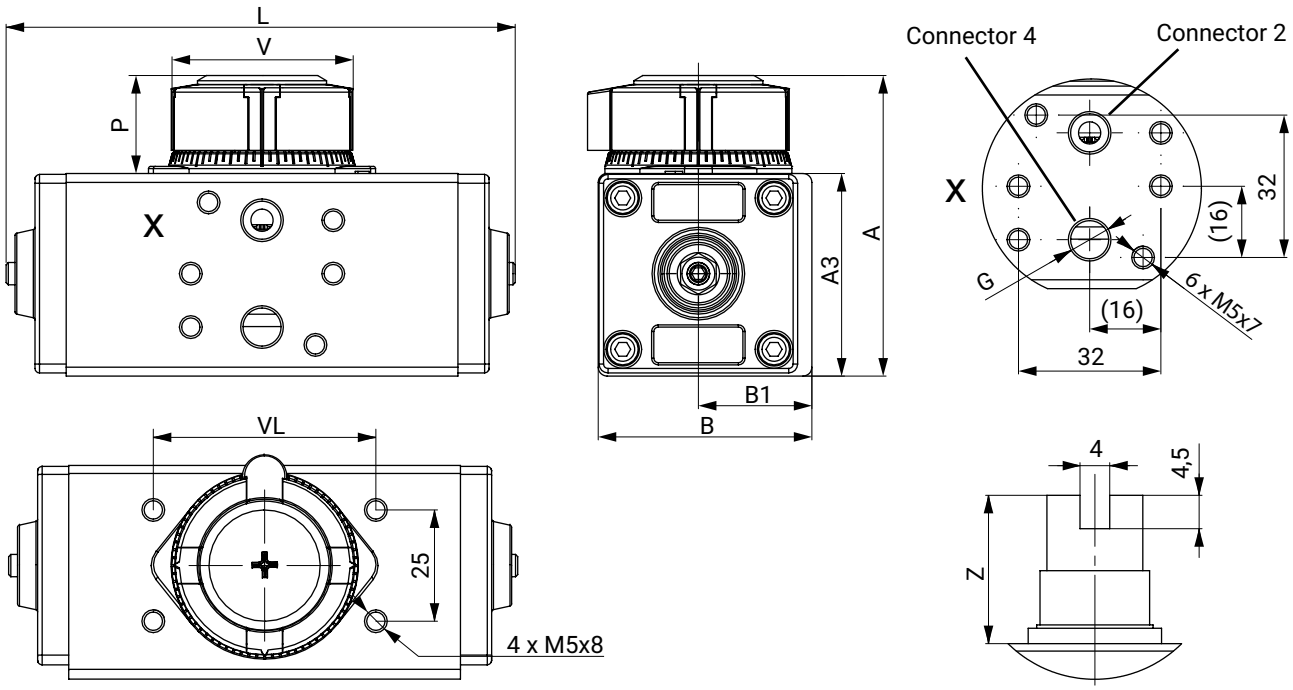

Type	A	A3	B	B1	V	G	P	VL	Z	L
G0032	67.5	45.5	49.0	26.5	40.0	G1/8"	22.0	50.0	20.0	115.0

Dimensions in mm

Type G0050 – G0180

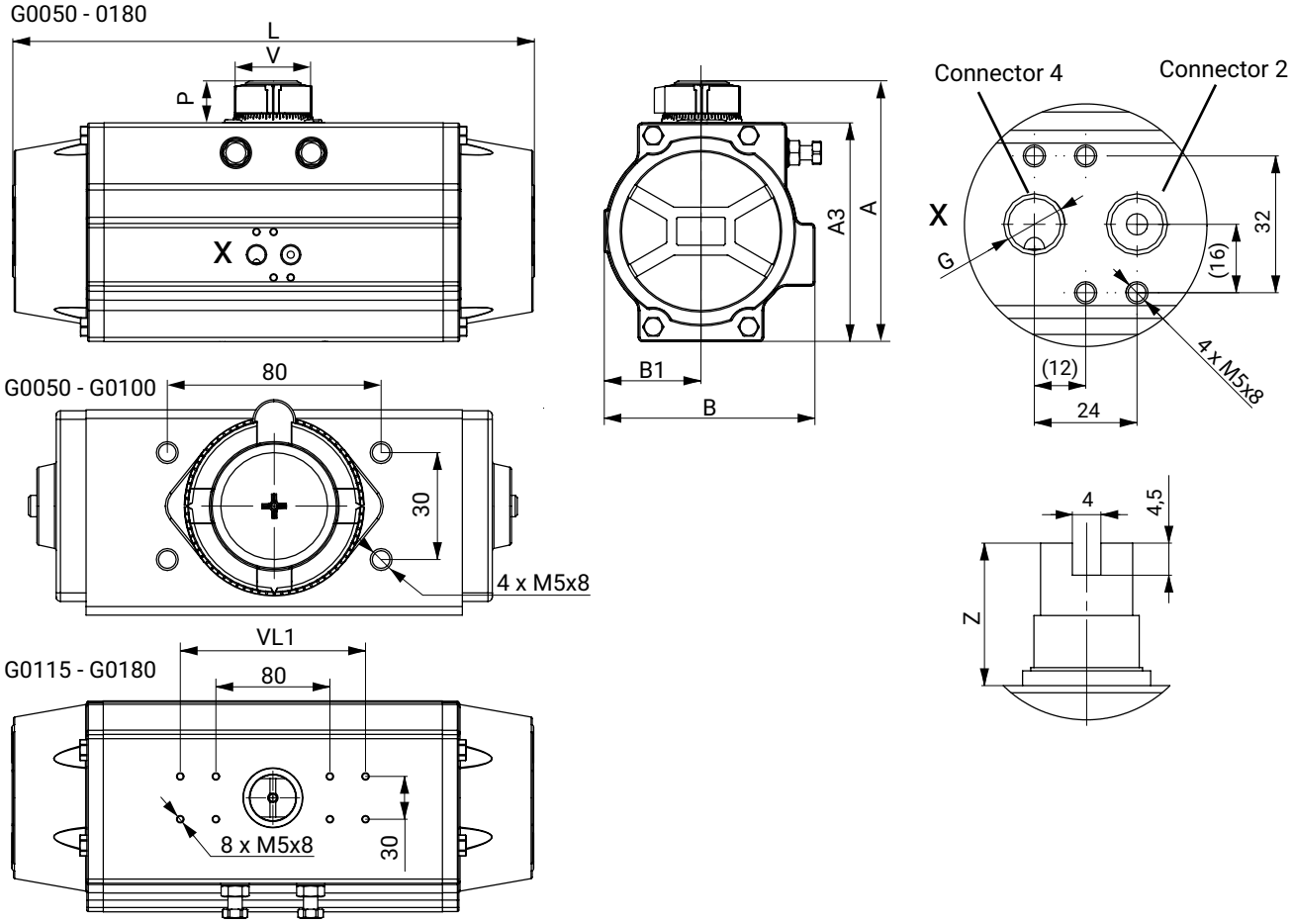

Type	A	A3	B	B1	V	G	P	VL	Z	L	VL1
G0050	92.0	70.0	71.0	30.0	40.0	G1/8"	22.0	80.0	20.0	141.0	-
G0065	102.5	80.5	80.5	35.5	40.0	G1/8"	22.0	80.0	20.0	162.0	-
G0075	119.0	97.0	94.5	42.0	40.0	G1/8"	22.0	80.0	20.0	208.0	-
G0085	130.5	108.5	106.0	47.5	40.0	G1/8"	22.0	80.0	20.0	237.0	-
G0100	143.5	121.5	123.0	55.0	40.0	G1/4"	22.0	80.0	20.0	271.5	-
G0115	174.0	142.0	137.0	64.0	65.0	G1/4"	32.0	80.0	30.0	337.0	130.0
G0125	185.5	153.5	148.0	68.0	65.0	G1/4"	32.0	80.0	30.0	366.0	130.0
G0140	207.9	175.9	164.0	76.5	65.0	G1/4"	32.0	80.0	30.0	428.5	130.0
G0160	225.0	193.0	188.0	88.0	65.0	G1/4"	32.0	80.0	30.0	512.0	130.0
G0180	251.0	219.0	212.5	96.5	65.0	G1/4"	32.0	80.0	30.0	573.0	130.0

Dimensions in mm

Body dimensions

Actuator flange

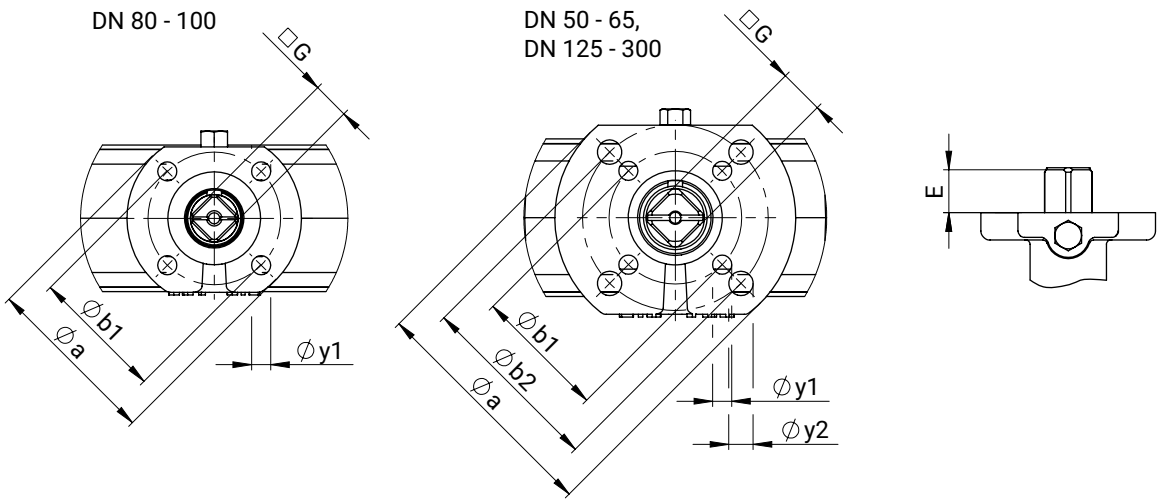

DN	□G	øa	ISO 5211	øb1	øy1	øb2	øy2	E
50	9.0	65.0	F03 | F05	36.0	6.0	50.0	7.0	17.0
65	11.0	65.0	F03 | F05	36.0	6.0	50.0	7.0	17.0
80	11.0	65.0	F05	50.0	7.0	-	-	17.0
100	14.0	65.0	F05	50.0	7.0	-	-	17.0
125	17.0	90.0	F05 | F07	50.0	7.0	70.0	9.0	23.0
150	17.0	90.0	F05 | F07	50.0	7.0	70.0	9.0	23.0
200	22.0	125.0	F07 | F10	70.0	9.0	102.0	11.0	34.0
250	22.0	125.0	F07 | F10	70.0	9.0	102.0	11.0	34.0
300	22.0	125.0	F07 | F10	70.0	9.0	102.0	11.0	34.0

Dimensions in mm

Body

Wafer body configuration

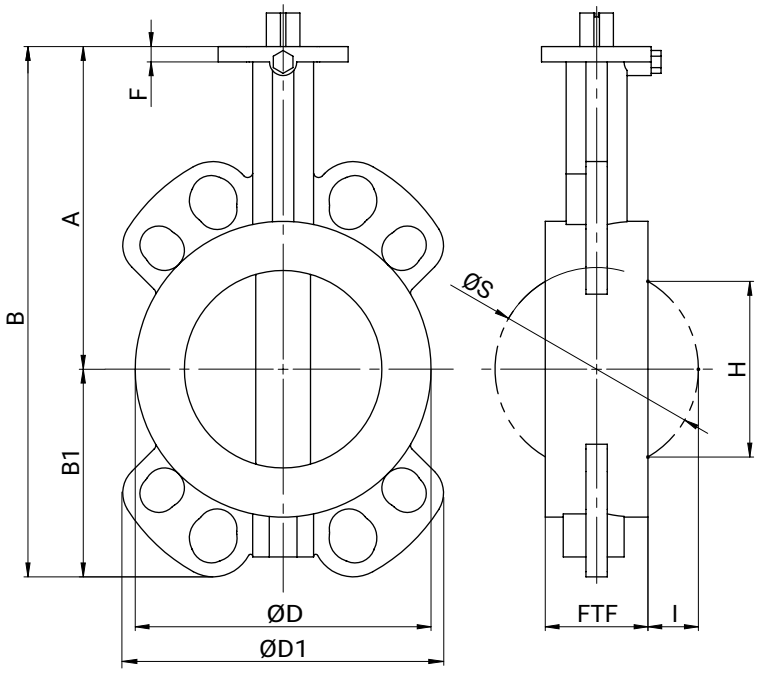

DN	PS	A	B	B1	ØD	ØD1	F	FTF	H	ØS	I
50	16	120.0	182.0	62.0	90.0	118.0	7.0	43.0	29.0	52.0	5.0
65	16	137.0	218.0	81.0	108.0	133.0	7.0	46.0	48.0	67.0	10.0
80	16	145.0	231.0	87.0	130.0	141.0	7.0	46.0	68.0	82.0	18.0
100	16	166.0	271.0	105.0	150.0	163.0	7.0	52.0	88.0	102.0	25.0
125	16	187.0	304.0	117.0	175.0	120.0	9.0	56.0	114.0	127.0	35.0
150	16	200.0	332.0	132.0	207.0	129.0	9.0	56.0	141.0	152.0	48.0
200	16	240.0	413.0	173.0	263.0	157.0	11.0	60.0	193.0	202.0	71.0
250	10	265.0	466.0	201.0	317.0	185.0	11.0	68.0	242.0	252.0	92.0
300	10	290.0	531.0	241.0	366.0	164.0	11.0	78.0	291.0	302.0	112.0

Dimensions in mm

Connections

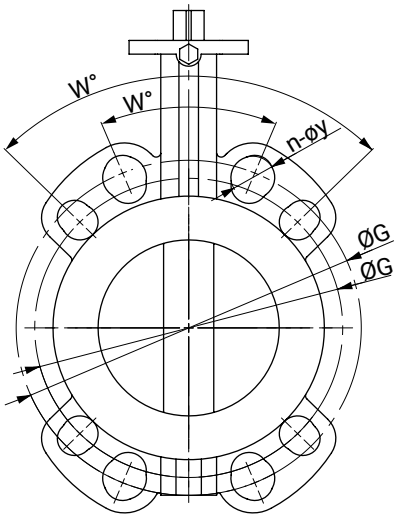

Connection EN1092, EN1759

DN	INCH	Connection (code)															
		EN1092-1 PN6 (code 1)				EN1092-1 PN10 (code 2)				EN1092-1 PN16 (code 3)				EN1759/CL150 (code D)			
DIN	ASME	w°	n	ØG	y	w°	n	ØG	y	w°	n	ØG	y	w°	n	ØG	y
50	**2"**	90	4	110.0	14.0	90	4	125.0	18.0	90	4	125.0	18.0	90	4	120.6	19.0
65	**2½"**	90	4	130.0	14.0	90	8	145.0	18.0	90	8	145.0	18.0	90	4	139.7	19.0
80	**3"**	90	4	150.0	18.0	45	8	160.0	18.0	45	8	160.0	18.0	90	4	152.4	19.0
100	**4"**	90	4	170.0	18.0	45	8	180.0	18.0	45	8	180.0	18.0	45	8	190.5	19.0
125	**5"**	45	8	200.0	18.0	45	8	210.0	18.0	45	8	210.0	18.0	45	8	215.9	22.2
150	**6"**	45	8	225.0	18.0	45	8	240.0	22.0	45	8	240.0	22.0	45	8	241.3	22.2
200	**8"**	45	8	280.0	18.0	45	8	295.0	22.0	30	12	295.0	22.0	45	8	298.5	22.2
250	**10"**	30	12	335.0	18.0	30	12	350.0	22.0	30	12	355.0	26.0	30	12	362.0	25.4
300	**12"**	30	12	395.0	22.0	30	12	400.0	22.0	30	12	410.0	26.0	30	12	431.8	25.4

Dimensions in mm
n = number of bolts

Connection AS2129, BS10

DN	INCH	Connection (code)															
		AS 2129 D (code T)				AS 2129 E (code U)				BS10 D (code H)				BS10 E (code S)			
DIN	ASME	w°	n	ØG	y	w°	n	ØG	y	w°	n	ØG	y	w°	n	ØG	y
50	**2"**	90	4	114.0	18.0	90	4	114.0	18.0	90	4	114.3	17.5	90	4	114.3	17.5
65	**2½"**	90	4	127.0	18.0	90	4	127.0	18.0	90	4	127.0	17.5	90	4	127.0	17.5
80	**3"**	90	4	146.0	18.0	90	4	146.0	18.0	90	4	146.1	17.5	90	4	146.1	17.5
100	**4"**	90	4	178.0	18.0	45	8	178.0	18.0	90	4	177.8	17.5	45	8	177.8	17.5
125	**5"**	45	8	210.0	18.0	45	8	210.0	18.0	45	8	209.6	17.5	45	8	209.6	17.5
150	**6"**	45	8	235.0	18.0	45	8	235.0	22.0	45	8	235.0	17.5	45	8	235.0	20.6
200	**8"**	45	8	292.0	18.0	45	8	292.0	22.0	45	8	292.1	17.5	45	8	292.1	20.6
250	**10"**	45	8	356.0	22.0	30	12	356.0	22.0	45	8	355.6	22.2	30	12	355.6	22.2
300	**12"**	30	12	406.0	22.0	30	12	406.0	26.0	30	12	406.4	22.2	30	12	406.4	25.4

Dimensions in mm
n = number of bolts

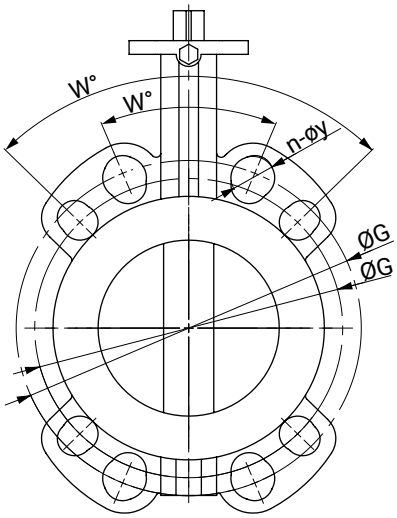

Connection JIS K10, K16

DN	INCH	Connection (code)							
		JIS-K10 (code G)				JIS-K16 (code J)			
DIN	ASME	w°	n	ØG	y	w°	n	ØG	y
50	**2"**	90	4	120.0	19.0	45	8	120.0	19.0
65	**2½"**	90	4	140.0	19.0	45	8	140.0	19.0
80	**3"**	45	8	150.0	19.0	45	8	160.0	23.0
100	**4"**	45	8	175.0	19.0	45	8	185.0	23.0
125	**5"**	45	8	210.0	23.0	45	8	225.0	25.0
150	**6"**	45	8	240.0	23.0	30	12	260.0	25.0
200	**8"**	30	12	290.0	23.0	30	12	305.0	25.0
250	**10"**	30	12	355.0	25.0	30	12	380.0	27.0
300	**12"**	22,5	16	400.0	25.0	22.5	16	430.0	27.0

Dimensions in mm
n = number of bolts

Lug body configuration

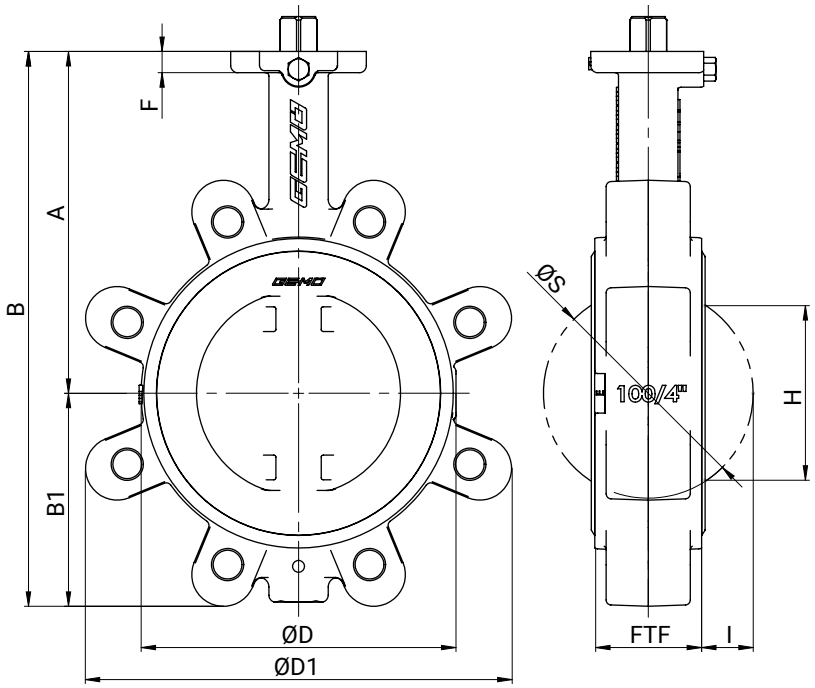

DN	PS	A	B	B1	ØD	ØD1	F	FTF	H	ØS	I
50	16	120.0	182.0	62.0	91.0	116.0	9.0	44.0	29.0	52.0	4.0
65	16	137.0	219.0	82.0	109.0	126.0	9.0	46.0	48.0	67.0	10.0
80	16	145.0	234.0	89.0	131.0	177.0	9.0	46.0	68.0	82.0	18.0
100	16	166.0	270.0	104.0	153.0	207.0	10.0	52.0	88.0	102.0	25.0
125	16	187.0	305.0	118.0	175.0	231.0	10.0	56.0	114.0	127.0	36.0
150	16	200.0	333.0	133.0	208.0	255.0	10.0	56.0	141.0	152.0	48.0
200	16	240.0	415.0	175.0	264.0	325.0	12.0	60.0	193.0	202.0	71.0
250	10	265.0	467.0	202.0	317.0	386.0	11.0	68.0	242.0	252.0	92.0
300	10	290.0	531.0	241.0	366.0	459.0	12.0	78.0	291.0	302.0	112.0

Dimensions in mm

Connections

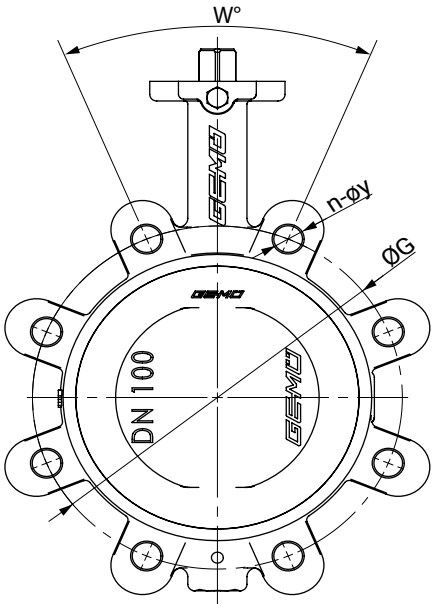

Connection EN1092, EN1759

DN	INCH	Connection (code)															
		EN1092-1 PN6 (code 1)				EN1092-1 PN10 (code 2)				EN1092-1 PN16 (code 3)				EN1759/CL150 (code D)			
DIN	ASME	w°	n	ØG	y	w°	n	ØG	y	w°	n	ØG	y	w°	n	ØG	y
50	2"	90	4	110.0	M12	90	4	125.0	M16	90	4	125.0	M16	90	4	120.6	5/8"
65	2½"	90	4	130.0	M12	90	4*	145.0	M16	90	8*	145.0	M16	90	4	139.7	5/8"
80	3"	90	4	150.0	M16	45	8	160.0	M16	45	8	160.0	M16	90	4	152.4	5/8"
100	4"	90	4	170.0	M16	45	8	180.0	M16	45	8	180.0	M16	45	8	190.5	5/8"
125	5"	45	8	200.0	M16	45	8	210.0	M16	45	8	210.0	M16	45	8	215.9	3/4"
150	6"	45	8	225.0	M16	45	8	240.0	M20	45	8	240.0	M20	45	8	241.3	3/4"
200	8"	45	8	280.0	M16	45	8	295.0	M20	30	12	295.0	M20	45	8	298.5	3/4"
250	10"	30	12	335.0	M16	30	12	350.0	M20	30	12	355.0	M24	30	12	362.0	7/8"
300	12"	30	12	395.0	M20	30	12	400.0	M20	30	12	410.0	M24	30	12	431.8	7/8"

Dimensions in mm
n = number of bolts

* Standard: 8 holes code 3 (PN16); if 4 holes are required, select code 2 (PN10);

Connection AS 2129, BS10

DN	INCH	Connection (code)															
		AS 2129 D (code T)				AS 2129 E (code U)				BS10 D (code H)				BS10 E (code S)			
DIN	ASME	w°	n	ØG	y	w°	n	ØG	y	w°	n	ØG	y	w°	n	ØG	y
50	2"	90	4	114.0	M16	90	4	114.0	M16	90	4	114.3	5/8"	90	4	114.3	5/8"
65	2½"	90	4	127.0	M16	90	4	127.0	M16	90	4	127.0	5/8"	90	4	127.0	5/8"
80	3"	90	4	146.0	M16	90	4	146.0	M16	90	4	146.1	5/8"	90	4	146.1	5/8"
100	4"	90	4	178.0	M16	45	8	178.0	M16	90	4	177.8	5/8"	45	8	177.8	5/8"
125	5"	45	8	210.0	M16	45	8	210.0	M16	45	8	209.6	5/8"	45	8	209.6	5/8"
150	6"	45	8	235.0	M16	45	8	235.0	M20	45	8	235.0	5/8"	45	8	235.0	3/4"
200	8"	45	8	292.0	M16	45	8	292.0	M20	45	8	292.1	5/8"	45	8	292.1	3/4"
250	10"	45	8	356.0	M20	30	12	356.0	M20	45	8	355.6	3/4"	30	12	355.6	3/4"

Dimensions

DN	INCH	Connection (code)															
		AS 2129 D (code T)				AS 2129 E (code U)				BS10 D (code H)				BS10 E (code S)			
DIN	ASME	w°	n	ØG	y	w°	n	ØG	y	w°	n	ØG	y	w°	n	ØG	y
300	12"	30	12	406.0	M20	30	12	406.0	M24	30	12	406.4	3/4"	30	12	406.4	7/8"

Dimensions in mm
n = number of bolts

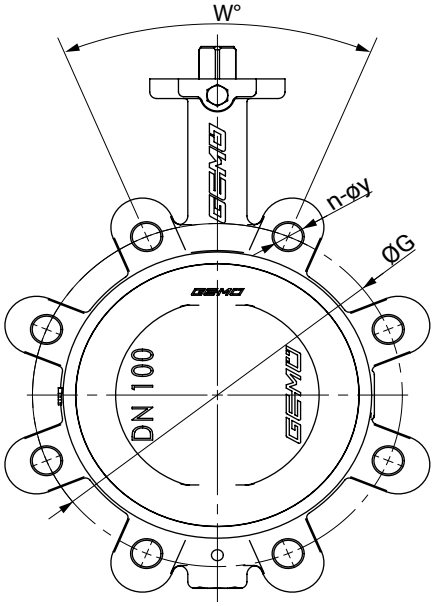

Connection JIS K10, JIS K16

DN	INCH	Connection (code)							
		JIS-K10 (code G)				JIS-K16 (code J)			
DIN	ASME	w°	n	ØG	y	w°	n	ØG	y
50	2"	90.0	4	120.0	M16	45.0	8	120.0	M16
65	2½"	90.0	4	140.0	M16	45.0	8	140.0	M16
80	3"	45.0	8	150.0	M16	45.0	8	160.0	M20
100	4"	45.0	8	175.0	M16	45.0	8	185.0	M20
125	5"	45.0	8	210.0	M20	45.0	8	225.0	M22
150	6"	45.0	8	240.0	M20	30.0	12	260.0	M22
200	8"	30.0	12	290.0	M20	30.0	12	305.0	M22
250	10"	30.0	12	355.0	M22	30.0	12	380.0	M24
300	12"	22.5	16	400.0	M22	22.5	16	430.0	M24

Dimensions in mm
n = number of bolts

Add-on components

GEMÜ LSF

Inductive dual sensor for quarter turn valves

The GEMÜ LSF inductive dual sensor is suitable for mounting to manually and pneumatically operated quarter turn valves. It is also fitted with an optical position indicator for visual confirmation of position.

GEMÜ LSC

Limit switch box for quarter turn actuators

The GEMÜ LSC limit switch box is suitable for mounting to manually and pneumatically operated quarter turn valves. It is also fitted with an optical position indicator for visual confirmation of position.

GEMÜ ILG-D

Manual override gearbox

The ILG-D manual override gearbox is designed for pneumatic valve actuators in order to enable reliable manual operation of the actuators. All units are mounted between valve and actuator and can be supplied with an ISO actuator shaft.

These gearboxes have a disengageable handwheel.

To ensure a long service life, the housing is sealed to IP65 and the actuator shaft is made of protected steel.

Accessories

GEMÜ 2022 Dual throttle

Dual throttle

The GEMÜ 2022 throttle valves are available as throttle valve, throttle check valve and dual throttle check valve. In pneumatic actuators they are used to regulate the compressed air depending on the function for the supply or exhaust air and can be set independently of each other in the case of dual throttle check valves.

GEMÜ 8500

Electrically operated pilot solenoid valve

The GEMÜ 8500 servo assisted 3/2 or 5/2-way pilot solenoid valve is indirectly controlled. The body is made of aluminium. The plastic encapsulated coil is detachable. The piston valve has a soft elastomer seal.

GEMÜ 8500DRN

Throttle plate

Throttle plates can be used to continuously adjust the travel times of pneumatic quarter turn actuators in both the "OPEN" and "CLOSED" directions independently of one another. They are installed between the NAMUR valve and the quarter turn actuator.

GEMÜ 1751

Silencer

Damping of vent hole or suction noises and coarse filtering of the suction air for pneumatic applications

Certificates

Certificate	Standard	Item number
2.1 Certificate of compliance with the order	EN 10204	88039442
2.2 Functionality	EN 10204/EN 12266-2 F20	88439527
2.2 Pressure test	EN 10204, DIN EN 12266 P10, P11, P12	88039443
3.1 Body material	EN 10204	88314529
3.1 Disc material	EN 10204	88314530
3.1 Shaft material		88734227
3.1 Pressure test	EN 10204, DIN EN 12266 P10, P11, P12	88337125
3.1 Layer thickness measurement		88460229
3.1 Surface roughness measurement (only disc code B)		88094384

GEMÜ CONEXO

The interaction of valve components that are equipped with RFID chips and an associated IT infrastructure actively increase process reliability.

Thanks to serialization, every valve and every relevant valve component such as the body, actuator or diaphragm, and even automation components, can be clearly traced and read using the CONEXO pen RFID reader. The CONEXO app, which can be installed on mobile devices, not only facilitates and improves the "installation qualification" process, but also makes the maintenance process much more transparent and easier to document. The app actively guides the maintenance technician through the maintenance schedule and directly provides him with all the information assigned to the valve, such as test reports, testing documentation and maintenance histories. The CONEXO portal acts as a central element, helping to collect, manage and process all data.

For further information on GEMÜ CONEXO please visit:
www.gemu-group.com/conexo

Ordering

GEMÜ Conexo must be ordered separately with the ordering option "CONEXO".

GEMÜ Gebr. Müller Apparatebau GmbH & Co. KG
Fritz-Müller-Straße 6-8, 74653 Ingelfingen-Criesbach, Germany
Phone +49 (0) 7940 1230 · info@gemue.de
www.gemu-group.com

Subject to alteration | 01.2023 | 88730033