GEMÜ R487 Victoria

Manually operated butterfly valve

Features

- Low torques thanks to PTFE coated bushes
- Bubble tight sealing, in accordance with EN 12266-1/P12, leak rate A
- Liner material is easy to read when installed
- Sleek disc design for higher Kv values
- Robust body coating comparable to ISO 12944-6 C5
- Various actuator types can be selected
- Optional accessories are installed, set and tested so they are ready for operation

Description

The GEMÜ R487 Victoria soft seated metal butterfly valve is manually operated. It has a hand lever or gearbox depending on customer requirements. The butterfly valve is available in nominal sizes DN 50 to 300 and in standard installation lengths ISO 5752/20 | EN 558-1/20 | API 609 category A (DIN 3202 K1) in wafer and lug body versions.

Technical specifications

- **Media temperature:** -10 to 160 °C
- **Ambient temperature:** -10 to 70 °C
- **Operating pressure :** 0 to 16 bar
- **Nominal sizes:** DN 50 to 300
- **Body configurations:** Lug I Wafer
- **Connection standards:** AS I ASME I BS I DIN I EN I ISO I JIS
- **Body materials:** EN-GJS-400-15, SG iron material I EN-GJS-400-18-LT, SG iron material
- **Body coating:** Epoxy
- **Liner materials:** EPDM I FKM I NBR I SBR, abrasion resistant I Silicone
- **Disc materials:** 1.4408, investment casting material I 1.4408, polished investment casting material I EN-GJS-400-15, SG iron material
- **Disc coating:** Epoxy I Halar® I Rilsan®
- **Conformities:** ACS I ATEX I Belgaqua I DNV GL I DVGW Gas I EAC I FDA I Functional safety I NSF I Oxygen I Regulation (EC) No. 1935/2004 I TA Luft (German Clean Air Act) I WRAS

Technical data depends on the respective configuration

further information
webcode: GW-R487

Product line

	GEMÜ R480 Victoria	**GEMÜ R481 Victoria**	**GEMÜ R487 Victoria**	**GEMÜ R488 Victoria**
Operation				
With bare shaft	●	-	-	-
Manual	-	-	●	-
Pneumatic	-	●	-	-
Motorized	-	-	-	●
Nominal sizes	DN 50 to 300	DN 50 to 300	DN 50 to 300	DN 50 to 300
Media temperature	-10 to 160 °C	-10 to 160 °C	-10 to 160 °C	-10 to 160 °C
Operating pressure	0 to 16 bar	0 to 16 bar	0 to 16 bar	0 to 16 bar
Connection types				
Flange (lug)	●	●	●	●
Flange (wafer)	●	●	●	●
Conformities				
ACS	●	●	●	●
ATEX	●	●	●	●
Belgaqua	●	●	●	●
DNV GL	●	●	●	●
DVGW Gas	●	●	●	●
EAC	●	●	●	●
FDA	●	●	●	●
Functional safety	●	●	●	●
NSF	●	●	●	●
Oxygen	●	●	●	●
Regulation (EC) No. 1935/2004	●	●	●	●
TA Luft (German Clean Air Act)	●	●	●	●
WRAS	●	●	●	●

Product description

Construction

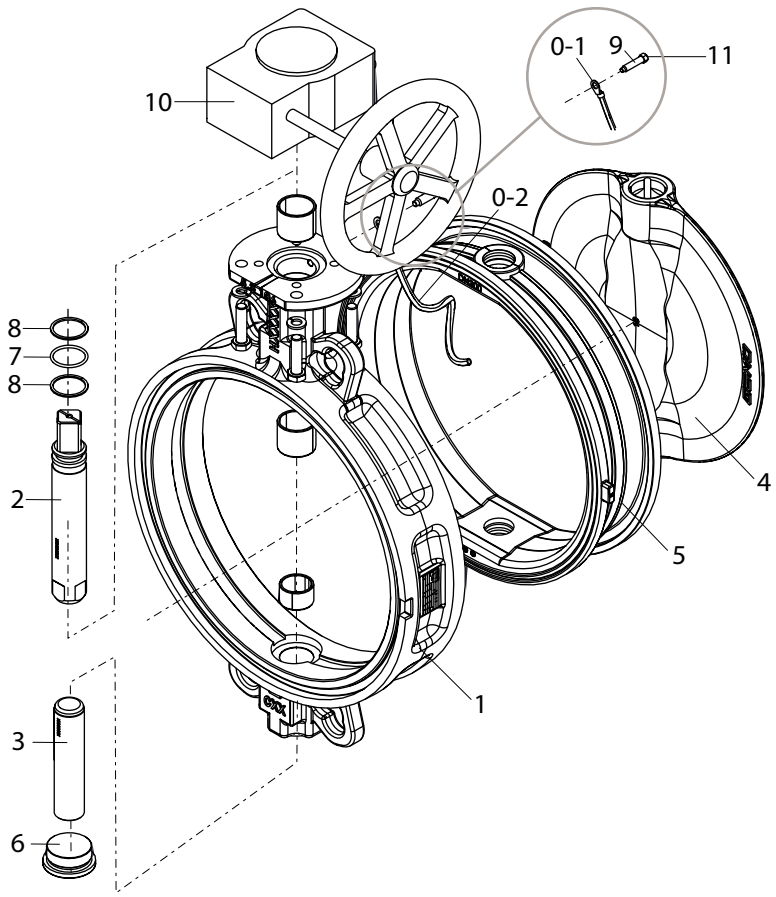

Item	Name	Materials
1	Body	SG iron 5.3106, epoxy coated (RAL 5021)
2	Shaft	1.4021
3	Axis	1.4021
4	Disc	Various materials (see order data)
5	Liner	Various materials (see order data)
6	Threaded plug	1.4408
7	O-ring	NBR
8	Support rings	PTFE
9	Hexagon head bolts	Stainless steel A2-70
0	Earthing kit for ATEX version	
0-1	Cable lug (ATEX version)	
0-2	Stranded wire (ATEX version)	
10	Manual actuator	Aluminium, polyurethane coated GG25, polyurethane coated
11	CONEXO RFID chip (see “GEMÜ CONEXO“, page 24)	

Actuator assignment

DN	Actuator version (code) [1]								
	AHL09	AHL11	AHL14	AHL17	AHL22	SAHL09	SAHL11	SAHL14	SAHL17
50	X	-	-	-	-	X	-	-	-
65	-	X	-	-	-	-	X	-	-
80	-	X	-	-	-	-	X	-	-
100	-	-	X	-	-	-	-	X	-
125	-	-	-	X	-	-	-	-	X
150	-	-	-	X	-	-	-	-	X
200	-	-	-	-	X	-	-	-	-
250	-	-	-	-	-	-	-	-	-
300	-	-	-	-	-	-	-	-	-

DN	Actuator version (code) [1]							
	SHL09	SHL11	SHL14	SHL17	VHL14	VHL17	VHL22	GB232
50	X	-	-	-	X	-	-	X
65	-	X	-	-	X	-	-	X
80	-	X	-	-	X	-	-	X
100	-	-	X	-	X	-	-	X
125	-	-	-	X	-	X	-	X
150	-	-	-	X	-	X	-	X
200	-	-	-	-	-	-	X	X
250	-	-	-	-	-	-	-	X
300	-	-	-	-	-	-	-	X

1) **Actuator version**
Code AHL09: Hand lever, aluminium
Code AHL11: Hand lever, aluminium
Code AHL14: Hand lever, aluminium
Code AHL17: Hand lever, aluminium
Code AHL22: Hand lever, aluminium
Code GB232: Gearbox, die-cast aluminium casing
Code SAHL09: Hand lever, aluminium, continuous
Code SAHL11: Hand lever, aluminium, continuous
Code SAHL14: Hand lever, aluminium, continuous
Code SAHL17: Hand lever, aluminium, continuous
Code SHL09: Hand lever, stainless steel
Code SHL11: Hand lever, stainless steel
Code SHL14: Hand lever, stainless steel
Code SHL17: Hand lever, stainless steel
Code VHL14: Hand lever, 10 notched positions, diagonal square, WAF = 14 mm
Code VHL17: Hand lever, 10 notched positions, diagonal square, WAF = 17 mm
Code VHL22: Hand lever, 10 notched positions, diagonal square, WAF = 22 mm

Product conformities

	Approved designs			Special function (code)
	Disc material	Liner material	Liner fixing	
Drinking water				
ACS	CF8M, 1.4408 (code A) CF8M, 1.4408 polished (code B) Super Duplex, 1.4469 (code D) EN-GJS-400-15 (GGG-40), epoxy coated (code E) EN-GJS-400-15, GGG40 Rilsan® PA11 coated (code R)	EPDM (code W)	All versions	A
Belgaqua	CF8M, 1.4408 (code A) CF8M, 1.4408 polished (code B) Super Duplex, 1.4469 (code D)	EPDM (code W)	Loose (code L)	B
DVGW Water	CF8M, 1.4408 (code A) CF8M, 1.4408 polished (code B)	EPDM (code W)	Loose (code L)	D
NSF	CF8M, 1.4408 (code A) Super Duplex, 1.4469 (code D)	EPDM (code W)	All versions	N
WRAS	CF8M, 1.4408 (code A) CF8M, 1.4408 polished (code B) Super Duplex, 1.4469 (code D)	EPDM (code W)	All versions	W
Food				
FDA	CF8M, 1.4408 (code A) CF8M, 1.4408 polished (code B) Super Duplex, 1.4469 (code D)	EPDM-AB/E (code G) EPDM-AB/W (code I) EPDM, white (code M) NBR (W) (code U) EPDM-HT (code Z)	All versions	no order code required
Regulation 1935/2004	CF8M, 1.4408 polished (code B)	EPDM, white (code M) NBR (W) (code U) EPDM-AB/W (code I)	All versions	no order code required
Gas				
DVGW Gas	CF8M, 1.4408 (code A) CF8M, 1.4408 polished (code B)	NBR (code J)	Loose (code L)	G
Oxygen				
Oxygen	CF8M, 1.4408 (code A) CF8M, 1.4408 polished (code B)	EPDM (code E)	All versions	O
Ship approval				
DNV GL	All materials	All materials	All versions	S
Explosion protection				
ATEX internal and external	CF8M, 1.4408 (code A) CF8M, 1.4408 polished (code B) Super Duplex, 1.4469 (code D) 2.0975 / CC333G (code G) 1.4435 / ASTM A351 / CF3M / AISI 316L (code I)	EPDM (code E)	All versions	Y
ATEX external	All materials	All materials	All versions	X

	Approved designs			Special function (code)
	Disc material	Liner material	Liner fixing	
Functional safety				
Functional safety	All materials	All materials	All versions	S

Other features are not relevant for the product conformities

Availabilities - Type of design

Type of design (code) [1]	
0101	All except liner code V, EPDM-HT code Z and silicone code S
1782	Only disc material code B

All other types of design can be freely combined.

1) **Type of design**
Code 0101: Media wetted area cleaned to ensure suitability for paint applications, parts sealed in plastic bag
Code 1782: Stainless steel valve disc, mechanically polished to 1.6 µm and electropolished, spigot internally polished to 1.6 µm

Order data

Other configurations available on request. Please check the availability with GEMÜ before ordering.

Products ordered with **bold marked ordering options** are so-called preferred series. Depending on the nominal size, these are available more quickly.

Order codes

1 Type	Code
Butterfly valve, manually operated, body with C5-M coating (min. 250µm) and integrated leakage groove, blow-out proof shaft with dust protection, multiple bearings through PTFE bushing, multiple sealing system with insertion slope, material easy to read when installed	R487

2 DN	Code
DN 50	50
DN 65	65
DN 80	80
DN 100	100
DN 125	125
DN 150	150
DN 200	200
DN 250	250
DN 300	300

3 Body configuration	Code
Flange-mounted design (lug), face-to-face dimension FTF EN 558 series 20	L
Intermediate flange design (wafer), face-to-face dimension FTF EN 558 series 20	W

4 Operating pressure	Code
3 bar	0
6 bar	**1**
10 bar	2
16 bar	**3**

5 Connection type	Code
PN 6 / flange EN 1092, face-to-face dimension FTF EN 558 series 20	1
PN 10 / flange EN 1092, face-to-face dimension FTF EN 558 series 20	2
PN 16 / flange EN 1092, face-to-face dimension FTF EN 558 series 20	3
ANSI B16.5, Class 150, face-to-face dimension FTF EN 558 series 20	D
Flange BS 10 Tab E, face-to-face dimension FTF EN 558, series 20	S
Flange AS 2129 Tab D, face-to-face dimension FTF EN 558, series 20	T
Flange AS 2129 Tab E, face-to-face dimension FTF EN 558, series 20	U
Flange BS 10 Tab D, face-to-face dimension FTF EN 558, series 20	H
JIS 10 K, face-to-face dimension FTF EN 558, series 20	G

5 Connection type	Code
JIS 16 K, face-to-face dimension FTF EN 558, series 20	J

6 Body material	Code
EN-GJS-400-15 (GGG-40), epoxy-coated 250 µm	2
EN-GJS-400-18-LT (GGG-40.3), epoxy coated 250 µm	3

7 Disc material	Code
1.4408	**A**
1.4408, polished, roughness Ra 0.6-3.2, except disc marking	B
1.4408, Halar coated	**C**
1.4469, super duplex	**D**
EN-GJS-400-15 (GGG-40), epoxy coated	**E**
EN-GJS-400-15 (GGG-40), HALAR coated	P
EN-GJS-400-15 (GGG-40), RILSAN PA11 coated	R
2.0975/CC333G	G
1.4435 / ASTM A351 / CF3M / AISI 316L	I

8 Shaft material	Code
1.4021	1

9 Shut-off seal material	Code
EPDM-HT-AB/T (abrasion resistant)	B
EPDM	**E**
SBR-AB/P (abrasion resistant)	F
EPDM-AB/E (abrasion resistant)	G
CSM	H
EPDM (FDA certification), white-AB/W	I
NBR (DVGW Gas certification)	J
EPDM (FDA certification), white	M
NBR	**N**
FKM +	O
EPDM-SHT (steam)	T
NBR (FDA certification), white	U
FKM	**V**
EPDM (drinking water compliant)	**W**
EPDM-HT (FDA certification)	**Z**

10 Liner fixing	Code
Liner bonded into body	B
Loose liner	L

11 Type of design	Code
Without	
Media wetted area cleaned to ensure suitability for paint applications, parts sealed in plastic bag	0101
Valve free of oil and grease, media wetted area cleaned and packed in PE bag	0107

11 Type of design	Code
Stainless steel valve disc, mechanically polished to 1.6 µm and electropolished, spigot internally polished to 1.6 µm	1782
Butterfly valve body powder coated, RAL 5015, sky blue	1892
Butterfly valve body powder coated, RAL 1023, traffic yellow	1925
Mounting parts in A4 quality. Caution! Danger of galling! Customer must provide for this!	5143
Thermal separation between actuator and valve body via mounting kit	5222
Thermal separation between actuator and valve body via dew point barrier	5226
Alu product label, black anodized, lasered marking, riveted to the body	6061
Gearbox prepared for limit switch mounting	7042
Gearbox with padlock system	7044

12 Special version	Code
Without	
ACS certification	A
BELGAQUA certification	B
DVGW Water certification	D
European origin	E
DVGW Gas approval (only valid in conjunction with a suitable manual, pneumatic or motorized actuator)	G
NSF 61 water certification	N
Oxygen	O
DNV GL certification	S
WRAS certification	W
ATEX certification	X
ATEX certification (in the piping system)	Y

13 Control function	Code
Manually operated	0

14 Actuator version	Code
Hand lever, aluminium	AHL09
Hand lever, aluminium	AHL11
Hand lever, aluminium	AHL14
Hand lever, aluminium	AHL17
Hand lever, aluminium	AHL22
Hand lever, stainless steel	SHL09
Hand lever, stainless steel	SHL11
Hand lever, stainless steel	SHL14
Hand lever, stainless steel	SHL17
Hand lever, aluminium, continuous	SAHL09
Hand lever, aluminium, continuous	SAHL11
Hand lever, aluminium, continuous	SAHL14
Hand lever, aluminium, continuous	SAHL17
Hand lever, 10 notched positions, diagonal square, WAF = 14 mm	VHL14
Hand lever, 10 notched positions, diagonal square, WAF = 17 mm	VHL17

14 Actuator version	Code
Hand lever, 10 notched positions, diagonal square, WAF = 22 mm	VHL22
Gearbox, die-cast aluminium casing	GB232

15 CONEXO	Code
Without	
Integrated RFID chip for electronic identification and traceability	C

Order example - standard version

Ordering option	Code	Description
1 Type	R487	Butterfly valve, manually operated, body with C5-M coating (min. 250µm) and integrated leakage groove, blow-out proof shaft with dust protection, multiple bearings through PTFE bushing, multiple sealing system with insertion slope, material easy to read when installed
2 DN	80	DN 80
3 Body configuration	W	Intermediate flange design (wafer), face-to-face dimension FTF EN 558 series 20
4 Operating pressure	3	16 bar
5 Connection type	3	PN 16 / flange EN 1092, face-to-face dimension FTF EN 558 series 20
6 Body material	2	EN-GJS-400-15 (GGG-40), epoxy-coated 250 µm
7 Disc material	A	1.4408
8 Shaft material	1	1.4021
9 Shut-off seal material	E	EPDM
10 Liner fixing	L	Loose liner
11 Type of design		Without
12 Special version		Without
13 Control function	0	Manually operated
14 Actuator version	AHL11	Hand lever, aluminium
15 CONEXO		Without

Technical data

Medium

Working medium: Gaseous and liquid media which have no negative impact on the physical and chemical properties of the disc and seat material.

Temperature

Media temperature: -10 — 160 °C

Depending on the liner and disc material or the type of liner fixing

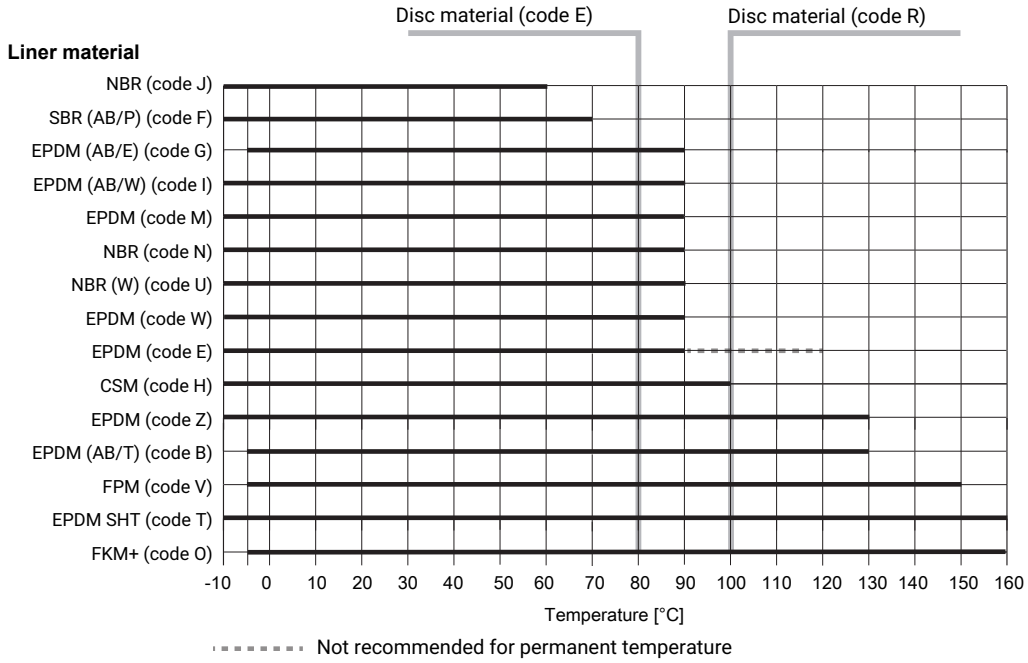

FKM material not suitable for water/steam applications above 100 °C,
Observe Pressure/Temperature diagram.

Ambient temperature: -10 — 70 °C

Storage temperature: -20 — 40 °C

Pressure

Operating pressure: 0 — 16 bar

Use as end-of-line valve
DN 50 – 200: 10 bar
DN 250, 300: 6 bar

Vacuum: Can be used up to a vacuum of 800 mbar (abs) with replaceable liner or with bonded liner up to a vacuum of 2 mbar (abs) through a leakage rate at 10^{-3} [mbar l / sec]

These values apply to room temperature and air. The values may deviate for other media and other temperatures.

Pressure/temperature diagram:

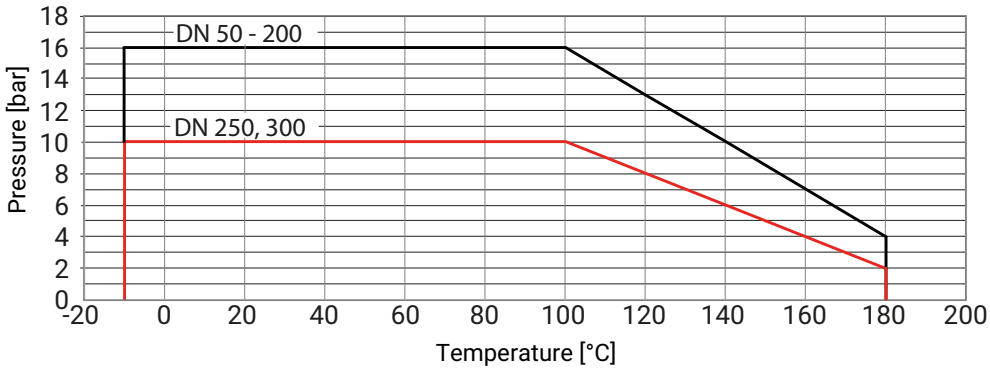

Pressure rating:

PN 3
PN 6
PN 10
PN 16

Kv values:

DN	Kv values at opening angle							
	20°	30°	40°	50°	60°	70°	80°	90°
50	3.0	9.0	20.0	33.0	65.0	110.0	124.0	125.0
65	9.0	15.0	30.0	64.0	118.0	195.0	214.0	222.0
80	19.0	40.0	66.0	117.0	196.0	321.0	353.0	363.0
100	29.0	75.0	137.0	213.0	316.0	487.0	584.0	618.0
125	48.0	100.0	185.0	315.0	550.0	895.0	1060.0	1120.0
150	60.0	150.0	281.0	450.0	789.0	1280.0	1630.0	1730.0
200	110.0	281.0	472.0	759.0	1480.0	2880.0	3710.0	3900.0
250	200.0	444.0	738.0	1190.0	2110.0	3880.0	5180.0	5410.0
300	250.0	682.0	1060.0	1670.0	3120.0	6360.0	8620.0	8930.0

Kv values in m³/h
When the opening angle is below 30° no regulation should be made!

Product conformity

Pressure Equipment Directive: 2014/68/EU

Food:
FDA
Regulation (EC) No. 1935/2004

Drinking water:
ACS
WRAS
Belgaqua
NSF

Oxygen: BAM compliant, the product is suitable for application with oxygen

Ship approval: DNV GL

Explosion protection: ATEX (2014/34/EU), order code Special version X and Y

ATEX marking:

Special function code X
Gas: Ⓔx II -/2 G Ex h -/IIB T6...T3 -/Gb X
Dust: Ⓔx II -/2D Ex h -/IIIC T150°C -/Db X

Special function code Y
Gas: Ⓔx II 2 G Ex h IIC/IIB T6 ... T3 Gb X
Dust: Ⓔx II 2 D Ex h IIIC T150 °C Db X

Mechanical data

Torques:

DN	PS			
	3 bar	6 bar	10 bar	16 bar *
50	3.0	5.0	7.0	9.0
65	8.0	10.0	13.0	15.0
80	10.0	15.0	20.0	25.0
100	15.0	20.0	30.0	40.0
125	25.0	35.0	45.0	60.0
150	40.0	50.0	80.0	100.0
200	-	-	-	160.0
250	-	-	200.0	-
300	-	-	330.0	-

Torques in Nm

* Standard
Working medium water (20 °C) and optimal operating conditions

Weight:

Butterfly valve

DN	Wafer	Lug
50	1.7	2.2
65	2.5	2.9
80	3.2	4.4
100	4.4	6.2
125	5.9	8.1
150	7.7	10.1
200	13.9	18.4
250	19.6	28.7
300	27.3	36.8

Weights in kg

Manual actuator

DN	Designation	Weight
50	AHL09, SHL09, SAHL09	0.314
65, 80	AHL11, SHL11, SAHL11	0.314
100	AHL14, SHL14, SAHL14	0.314
125, 150	AHL17, SHL17, SAHL17	0.716
200, 250	AHL22	0.73
50 - 100	VHL14	0.7
125, 150	VHL17	1.2
200	VHL22	2.1
25 – 100	GB 232	0.8
125, 150	GB 232	0.9
200 - 300	GB 232	1.4

Weights in kg

Dimensions

Actuator dimensions

Hand lever

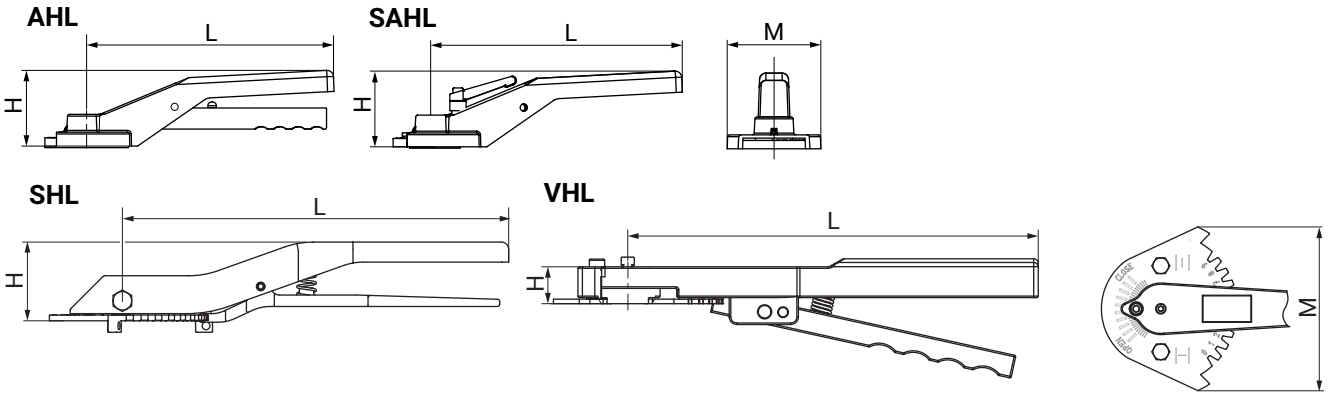

DN	Code	H	L	M
50 -100	**AHL09, SHL09, SAHL09, AHL11, SHL11, SAHL11, AHL14, SHL14, SAHL14**	70.0	200.0	74.0
125, 150	**AHL17, SAHL17**	90.0	270.0	102.0
125, 150	**SHL17**	51.0	325.0	102.0
200	**AHL22**	72.0	340.0	126.0
50 - 100	**VHL14**	19.0	195.0	107.0
125, 150	**VHL17**	24.0	267.0	107.0
200	**VHL22**	29.0	330.0	191.0

Dimensions in mm

Handwheel with gearbox

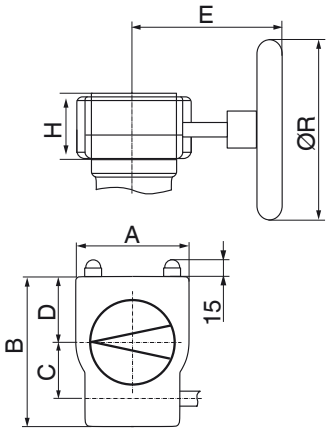

DN	Code	A	B	C	D	E	H	ØR
50	**GB 232**	80.0	114.0	42.5	48.0	121.0	53.0	100.0
125		80.0	114.0	42.5	48.0	171.0	59.0	100.0
150		80.0	114.0	42.5	48.0	171.0	59.0	160.0
200 - 300		100.0	131.0	50.0	56.0	195.0	67.0	200.0

Dimensions in mm

Body dimensions

Actuator flange

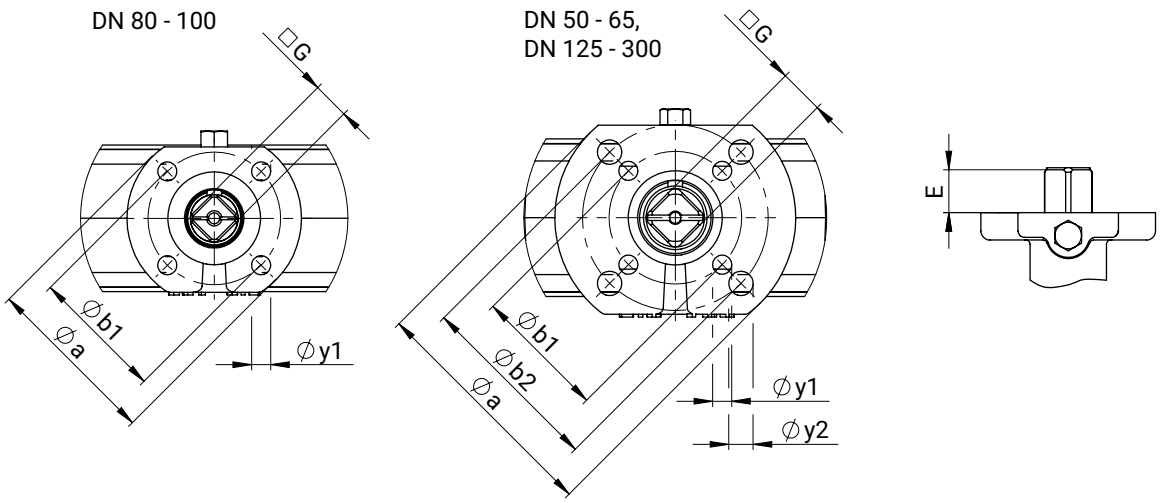

DN	□G	øa	ISO 5211	øb1	øy1	øb2	øy2	E
50	9.0	65.0	F03 | F05	36.0	6.0	50.0	7.0	17.0
65	11.0	65.0	F03 | F05	36.0	6.0	50.0	7.0	17.0
80	11.0	65.0	F05	50.0	7.0	-	-	17.0
100	14.0	65.0	F05	50.0	7.0	-	-	17.0
125	17.0	90.0	F05 | F07	50.0	7.0	70.0	9.0	23.0
150	17.0	90.0	F05 | F07	50.0	7.0	70.0	9.0	23.0
200	22.0	125.0	F07 | F10	70.0	9.0	102.0	11.0	34.0
250	22.0	125.0	F07 | F10	70.0	9.0	102.0	11.0	34.0
300	22.0	125.0	F07 | F10	70.0	9.0	102.0	11.0	34.0

Dimensions in mm

Body

Wafer body configuration

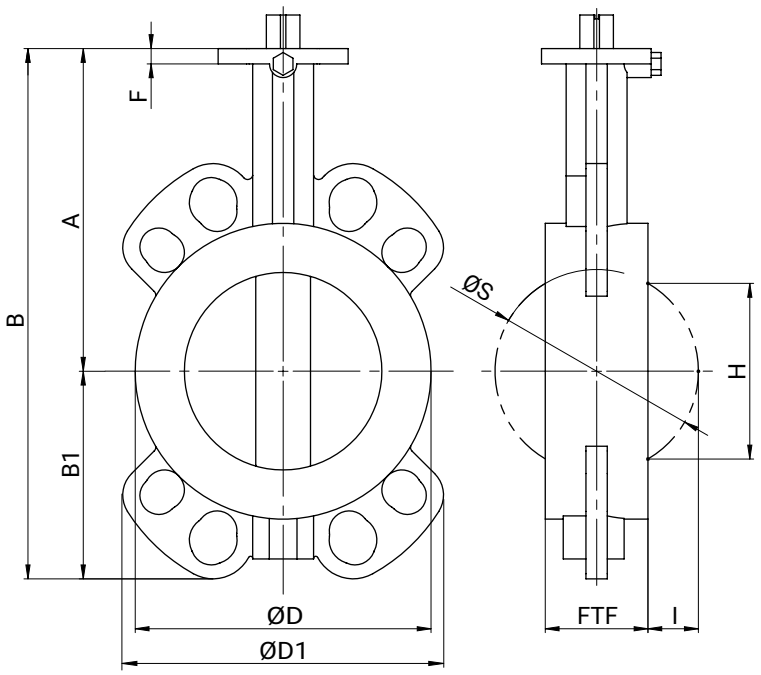

DN	PS	A	B	B1	ØD	ØD1	F	FTF	H	ØS	I
50	16	120.0	182.0	62.0	90.0	118.0	7.0	43.0	29.0	52.0	5.0
65	16	137.0	218.0	81.0	108.0	133.0	7.0	46.0	48.0	67.0	10.0
80	16	145.0	231.0	87.0	130.0	141.0	7.0	46.0	68.0	82.0	18.0
100	16	166.0	271.0	105.0	150.0	163.0	7.0	52.0	88.0	102.0	25.0
125	16	187.0	304.0	117.0	175.0	120.0	9.0	56.0	114.0	127.0	35.0
150	16	200.0	332.0	132.0	207.0	129.0	9.0	56.0	141.0	152.0	48.0
200	16	240.0	413.0	173.0	263.0	157.0	11.0	60.0	193.0	202.0	71.0
250	10	265.0	466.0	201.0	317.0	185.0	11.0	68.0	242.0	252.0	92.0
300	10	290.0	531.0	241.0	366.0	164.0	11.0	78.0	291.0	302.0	112.0

Dimensions in mm

Connections

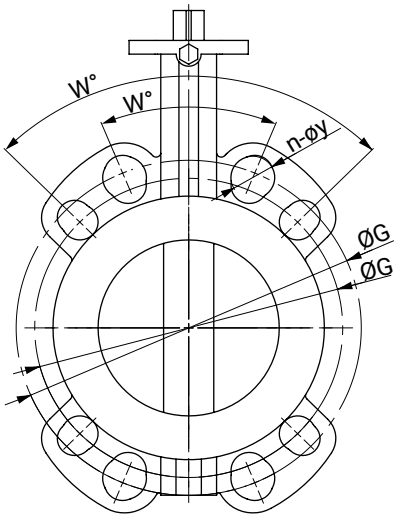

Connection EN1092, EN1759

DN	INCH	Connection (code)															
		EN1092-1 PN6 (code 1)				EN1092-1 PN10 (code 2)				EN1092-1 PN16 (code 3)				EN1759/CL150 (code D)			
DIN	ASME	w°	n	ØG	y	w°	n	ØG	y	w°	n	ØG	y	w°	n	ØG	y
50	**2"**	90	4	110.0	14.0	90	4	125.0	18.0	90	4	125.0	18.0	90	4	120.6	19.0
65	**2½"**	90	4	130.0	14.0	90	8	145.0	18.0	90	8	145.0	18.0	90	4	139.7	19.0
80	**3"**	90	4	150.0	18.0	45	8	160.0	18.0	45	8	160.0	18.0	90	4	152.4	19.0
100	**4"**	90	4	170.0	18.0	45	8	180.0	18.0	45	8	180.0	18.0	45	8	190.5	19.0
125	**5"**	45	8	200.0	18.0	45	8	210.0	18.0	45	8	210.0	18.0	45	8	215.9	22.2
150	**6"**	45	8	225.0	18.0	45	8	240.0	22.0	45	8	240.0	22.0	45	8	241.3	22.2
200	**8"**	45	8	280.0	18.0	45	8	295.0	22.0	30	12	295.0	22.0	45	8	298.5	22.2
250	**10"**	30	12	335.0	18.0	30	12	350.0	22.0	30	12	355.0	26.0	30	12	362.0	25.4
300	**12"**	30	12	395.0	22.0	30	12	400.0	22.0	30	12	410.0	26.0	30	12	431.8	25.4

Dimensions in mm
n = number of bolts

Connection AS2129, BS10

DN	INCH	Connection (code)															
		AS 2129 D (code T)				AS 2129 E (code U)				BS10 D (code H)				BS10 E (code S)			
DIN	ASME	w°	n	ØG	y	w°	n	ØG	y	w°	n	ØG	y	w°	n	ØG	y
50	**2"**	90	4	114.0	18.0	90	4	114.0	18.0	90	4	114.3	17.5	90	4	114.3	17.5
65	**2½"**	90	4	127.0	18.0	90	4	127.0	18.0	90	4	127.0	17.5	90	4	127.0	17.5
80	**3"**	90	4	146.0	18.0	90	4	146.0	18.0	90	4	146.1	17.5	90	4	146.1	17.5
100	**4"**	90	4	178.0	18.0	45	8	178.0	18.0	90	4	177.8	17.5	45	8	177.8	17.5
125	**5"**	45	8	210.0	18.0	45	8	210.0	18.0	45	8	209.6	17.5	45	8	209.6	17.5
150	**6"**	45	8	235.0	18.0	45	8	235.0	22.0	45	8	235.0	17.5	45	8	235.0	20.6
200	**8"**	45	8	292.0	18.0	45	8	292.0	22.0	45	8	292.1	17.5	45	8	292.1	20.6
250	**10"**	45	8	356.0	22.0	30	12	356.0	22.0	45	8	355.6	22.2	30	12	355.6	22.2
300	**12"**	30	12	406.0	22.0	30	12	406.0	26.0	30	12	406.4	22.2	30	12	406.4	25.4

Dimensions in mm
n = number of bolts

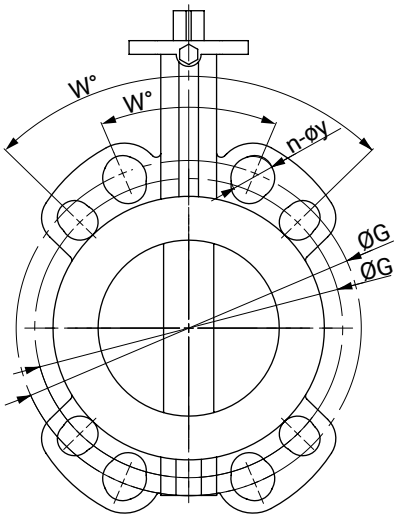

Connection JIS K10, K16

DN	INCH	Connection (code)							
		JIS-K10 (code G)				JIS-K16 (code J)			
DIN	ASME	w°	n	øG	y	w°	n	øG	y
50	**2"**	90	4	120.0	19.0	45	8	120.0	19.0
65	**2½"**	90	4	140.0	19.0	45	8	140.0	19.0
80	**3"**	45	8	150.0	19.0	45	8	160.0	23.0
100	**4"**	45	8	175.0	19.0	45	8	185.0	23.0
125	**5"**	45	8	210.0	23.0	45	8	225.0	25.0
150	**6"**	45	8	240.0	23.0	30	12	260.0	25.0
200	**8"**	30	12	290.0	23.0	30	12	305.0	25.0
250	**10"**	30	12	355.0	25.0	30	12	380.0	27.0
300	**12"**	22,5	16	400.0	25.0	22.5	16	430.0	27.0

Dimensions in mm
n = number of bolts

Lug body configuration

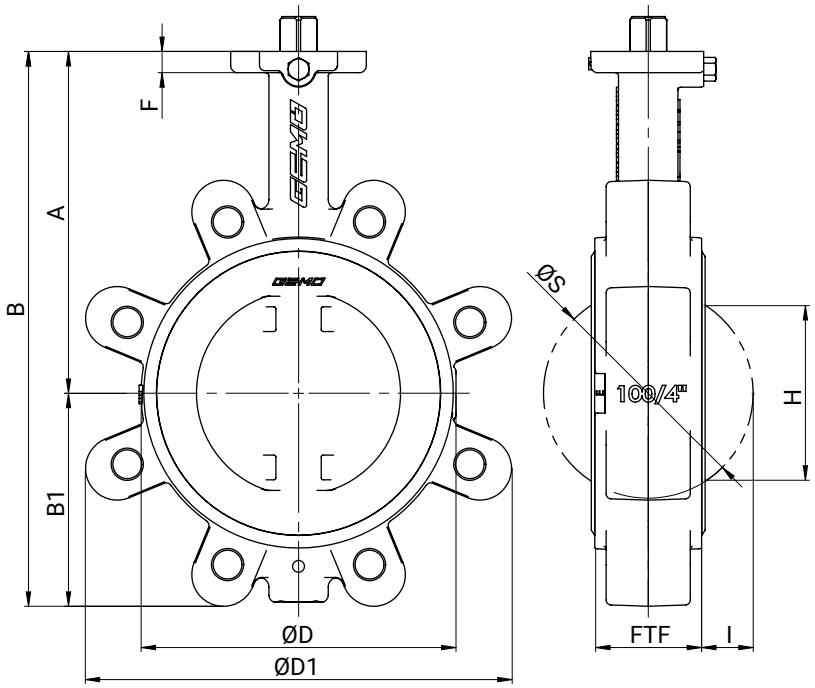

DN	PS	A	B	B1	ØD	ØD1	F	FTF	H	ØS	I
50	16	120.0	182.0	62.0	91.0	116.0	9.0	44.0	29.0	52.0	4.0
65	16	137.0	219.0	82.0	109.0	126.0	9.0	46.0	48.0	67.0	10.0
80	16	145.0	234.0	89.0	131.0	177.0	9.0	46.0	68.0	82.0	18.0
100	16	166.0	270.0	104.0	153.0	207.0	10.0	52.0	88.0	102.0	25.0
125	16	187.0	305.0	118.0	175.0	231.0	10.0	56.0	114.0	127.0	36.0
150	16	200.0	333.0	133.0	208.0	255.0	10.0	56.0	141.0	152.0	48.0
200	16	240.0	415.0	175.0	264.0	325.0	12.0	60.0	193.0	202.0	71.0
250	10	265.0	467.0	202.0	317.0	386.0	11.0	68.0	242.0	252.0	92.0
300	10	290.0	531.0	241.0	366.0	459.0	12.0	78.0	291.0	302.0	112.0

Dimensions in mm

Connections

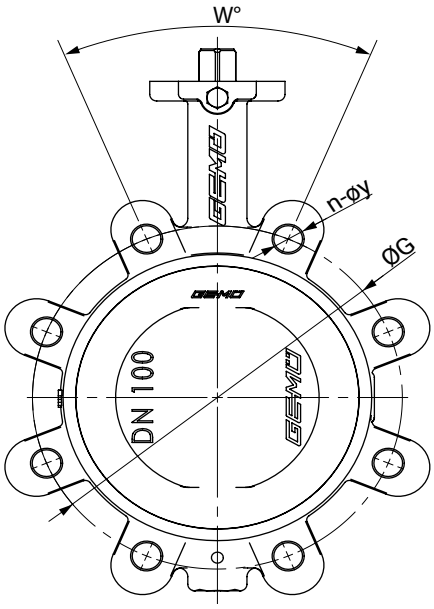

Connection EN1092, EN1759

DN	INCH	Connection (code)															
		EN1092-1 PN6 (code 1)				EN1092-1 PN10 (code 2)				EN1092-1 PN16 (code 3)				EN1759/CL150 (code D)			
DIN	ASME	w°	n	ØG	y	w°	n	ØG	y	w°	n	ØG	y	w°	n	ØG	y
50	2"	90	4	110.0	M12	90	4	125.0	M16	90	4	125.0	M16	90	4	120.6	5/8"
65	2½"	90	4	130.0	M12	90	4*	145.0	M16	90	8*	145.0	M16	90	4	139.7	5/8"
80	3"	90	4	150.0	M16	45	8	160.0	M16	45	8	160.0	M16	90	4	152.4	5/8"
100	4"	90	4	170.0	M16	45	8	180.0	M16	45	8	180.0	M16	45	8	190.5	5/8"
125	5"	45	8	200.0	M16	45	8	210.0	M16	45	8	210.0	M16	45	8	215.9	3/4"
150	6"	45	8	225.0	M16	45	8	240.0	M20	45	8	240.0	M20	45	8	241.3	3/4"
200	8"	45	8	280.0	M16	45	8	295.0	M20	30	12	295.0	M20	45	8	298.5	3/4"
250	10"	30	12	335.0	M16	30	12	350.0	M20	30	12	355.0	M24	30	12	362.0	7/8"
300	12"	30	12	395.0	M20	30	12	400.0	M20	30	12	410.0	M24	30	12	431.8	7/8"

Dimensions in mm
n = number of bolts

* Standard: 8 holes code 3 (PN16); if 4 holes are required, select code 2 (PN10);

Connection AS 2129, BS10

DN	INCH	Connection (code)															
		AS 2129 D (code T)				AS 2129 E (code U)				BS10 D (code H)				BS10 E (code S)			
DIN	ASME	w°	n	ØG	y	w°	n	ØG	y	w°	n	ØG	y	w°	n	ØG	y
50	2"	90	4	114.0	M16	90	4	114.0	M16	90	4	114.3	5/8"	90	4	114.3	5/8"
65	2½"	90	4	127.0	M16	90	4	127.0	M16	90	4	127.0	5/8"	90	4	127.0	5/8"
80	3"	90	4	146.0	M16	90	4	146.0	M16	90	4	146.1	5/8"	90	4	146.1	5/8"
100	4"	90	4	178.0	M16	45	8	178.0	M16	90	4	177.8	5/8"	45	8	177.8	5/8"
125	5"	45	8	210.0	M16	45	8	210.0	M16	45	8	209.6	5/8"	45	8	209.6	5/8"
150	6"	45	8	235.0	M16	45	8	235.0	M20	45	8	235.0	5/8"	45	8	235.0	3/4"
200	8"	45	8	292.0	M16	45	8	292.0	M20	45	8	292.1	5/8"	45	8	292.1	3/4"
250	10"	45	8	356.0	M20	30	12	356.0	M20	45	8	355.6	3/4"	30	12	355.6	3/4"

Dimensions

DN	INCH	Connection (code)															
		AS 2129 D (code T)				AS 2129 E (code U)				BS10 D (code H)				BS10 E (code S)			
DIN	ASME	w°	n	ØG	y	w°	n	ØG	y	w°	n	ØG	y	w°	n	ØG	y
300	12"	30	12	406.0	M20	30	12	406.0	M24	30	12	406.4	3/4"	30	12	406.4	7/8"

Dimensions in mm
n = number of bolts

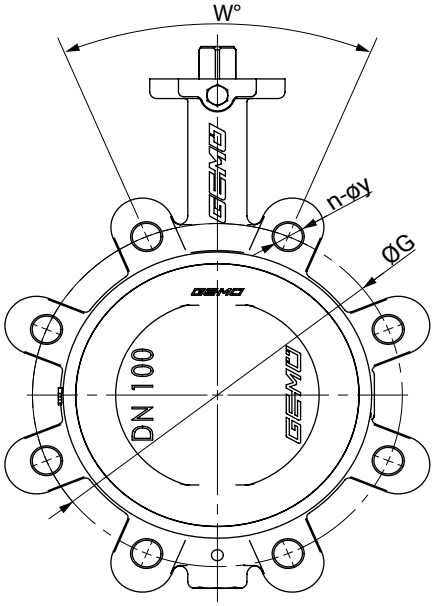

Connection JIS K10, JIS K16

DN	INCH	Connection (code)							
		JIS-K10 (code G)				JIS-K16 (code J)			
DIN	ASME	w°	n	ØG	y	w°	n	ØG	y
50	2"	90.0	4	120.0	M16	45.0	8	120.0	M16
65	2½"	90.0	4	140.0	M16	45.0	8	140.0	M16
80	3"	45.0	8	150.0	M16	45.0	8	160.0	M20
100	4"	45.0	8	175.0	M16	45.0	8	185.0	M20
125	5"	45.0	8	210.0	M20	45.0	8	225.0	M22
150	6"	45.0	8	240.0	M20	30.0	12	260.0	M22
200	8"	30.0	12	290.0	M20	30.0	12	305.0	M22
250	10"	30.0	12	355.0	M22	30.0	12	380.0	M24
300	12"	22.5	16	400.0	M22	22.5	16	430.0	M24

Dimensions in mm
n = number of bolts

Add-on components

GEMÜ LSC

Limit switch box for quarter turn actuators

The GEMÜ LSC limit switch box is suitable for mounting to manually and pneumatically operated quarter turn valves. It is also fitted with an optical position indicator for visual confirmation of position.

Accessories

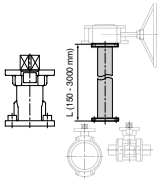

GEMÜ RC0

Shaft extension

The RCO shaft extension for quarter turn valves is a distance piece between manually, pneumatically or electrically operated valves. This means that valves can be protected from flooding or better access for operation of the valve can be ensured (also for manual override).

GEMÜ MSC

Mounting kit

The MSC mounting kit is an interface, for the same and different ends, to join flange designs according to ISO 5211. This mounting kit ensures thermal separation of actuator and valve body. It can also be used as height compensation for insulated pipelines. The mounting kit is available in steel, electrogalvanized and stainless steel in an open or closed design.

GEMÜ ADH

Mounting sleeve

The mounting sleeve accessories are available in the square and star geometry designs. These are used for the shaft and hub support for quarter turn actuators. Both sleeves have an internal square drive (please observe stated measurement dimensions here). The sleeve material is sintered metal and they are chemically nickel plated with a surface of 25 µm.

Certificates

Certificate	Standard	Item number
2.1 Certificate of compliance with the order	EN 10204	88039442
2.2 Functionality	EN 10204/EN 12266-2 F20	88439527
2.2 Pressure test	EN 10204, DIN EN 12266 P10, P11, P12	88039443
3.1 Body material	EN 10204	88314529
3.1 Disc material	EN 10204	88314530
3.1 Shaft material		88734227
3.1 Pressure test	EN 10204, DIN EN 12266 P10, P11, P12	88337125
3.1 Layer thickness measurement		88460229
3.1 Surface roughness measurement (only disc code B)		88094384

GEMÜ CONEXO

The interaction of valve components that are equipped with RFID chips and an associated IT infrastructure actively increase process reliability.

Thanks to serialization, every valve and every relevant valve component such as the body, actuator or diaphragm, and even automation components, can be clearly traced and read using the CONEXO pen RFID reader. The CONEXO app, which can be installed on mobile devices, not only facilitates and improves the "installation qualification" process, but also makes the maintenance process much more transparent and easier to document. The app actively guides the maintenance technician through the maintenance schedule and directly provides him with all the information assigned to the valve, such as test reports, testing documentation and maintenance histories. The CONEXO portal acts as a central element, helping to collect, manage and process all data.

For further information on GEMÜ CONEXO please visit:
www.gemu-group.com/conexo

Ordering

GEMÜ Conexo must be ordered separately with the ordering option "CONEXO".

GEMÜ Gebr. Müller Apparatebau GmbH & Co. KG
Fritz-Müller-Straße 6-8, 74653 Ingelfingen-Criesbach, Germany
Phone +49 (0) 7940 1230 · info@gemue.de
www.gemu-group.com

Subject to alteration | 01.2023 | 88730042