# GEMÜ 611/671

## Manually operated diaphragm valve

## Features

- Optional PVDF handwheel available in white (GEMÜ 611)
- Extensive range of accessories available, e.g. electrical position indicator for "open" handwheel position or lockable handwheel clamp (GEMÜ 671)

## Description

The GEMÜ 611/671 2/2-way diaphragm valves have a low-maintenance plastic actuator and are manually operated. An integral optical position indicator is standard.

## Technical specifications

- **Media temperature:** -10 to 80 °C
- **Sterilization temperature:** Not sterilizable
- **Ambient temperature:** 0 to 60 °C
- **Operating pressure :** 0 to 10 bar
- **Nominal sizes:** DN 10 to 100
- **Body configurations:** 2/2-way body I i-body I Welding configuration
- **Connection types:** Clamp I Flange I Spigot I Threaded connection
- **Connection standards:** ANSI I ASME I BS I DIN I EN I ISO I JIS I SMS
- **Body materials:** 1.4408, investment casting material I 1.4435 (316L), forged material I 1.4435 (BN2), forged material I 1.4435, investment casting material I 1.4539 (904L), forged material I CW617N, brass I EN-GJS-400-18-LT, SG iron material
- **Body lining:** PFA I PP
- **Diaphragm materials:** EPDM I FKM I PTFE/EPDM I PTFE/PVDF/EPDM
- **Conformities:** Belgaqua I EAC I FDA I Oxygen I Reg. (EU) No. 10/2011 I Regulation (EC) No. 1935/2004 I Regulation (EC) No. 2023/2006 I USP

Technical data depends on the respective configuration

BELGAQUA EAC FDA

further information
webcode: GW-611 / 671

# Product description

## Construction

**GEMÜ 611**

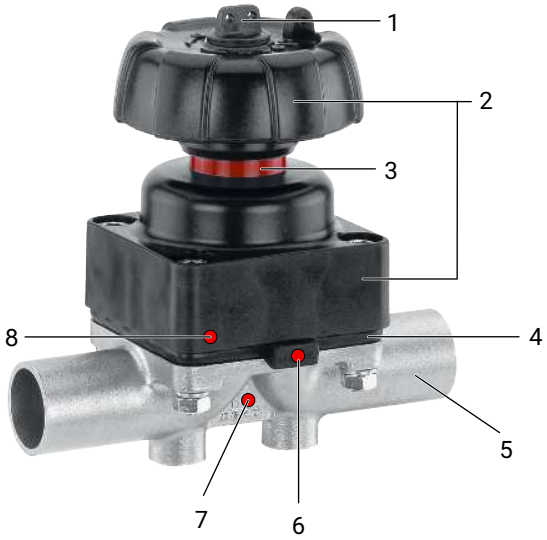


| Item | Name | Materials |
|---|---|---|
| 1 | Seal adjuster | |
| 2 | Manual actuator | |
| 3 | Position indicator | |
| 4 | Diaphragm | EPDM<br>FKM<br>PTFE/EPDM (one-piece) |
| 5 | Valve body | 1.4408, investment casting<br>1.4435, investment casting<br>1.4435 (F316L), forged body<br>1.4435 (BN2), forged body, Δ Fe < 0,5 %<br>1.4539, forged body<br>CW617N (brass) |
| 6 | CONEXO diaphragm RFID chip<br>(see Conexo information) | |
| 7 | CONEXO body RFID chip<br>(see Conexo information) | |
| 8 | CONEXO actuator RFID chip<br>(see Conexo information) | |

**GEMÜ 671**

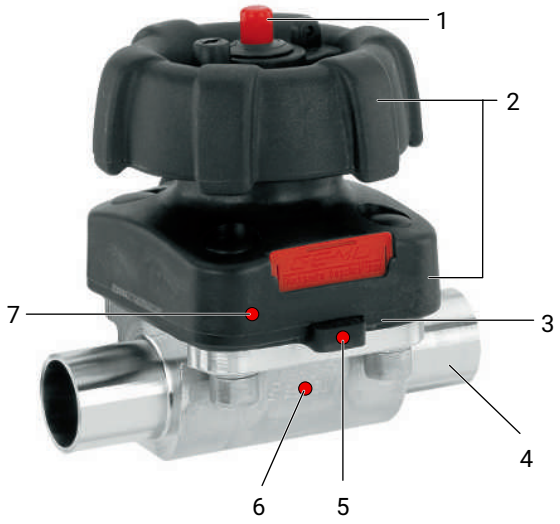


| Item | Name | Materials |
|---|---|---|
| 1 | Position indicator | |
| 2 | Manual actuator | |
| 3 | Diaphragm | EPDM<br>FKM<br>PTFE/EPDM (one-piece)<br>PTFE/EPDM (two-piece)<br>PTFE/PVDF/EPDM (three-piece) |
| 4 | Valve body | 1.4408, investment casting<br>1.4408, investment casting PFA lined<br>1.4435, investment casting<br>1.4435 (F316L), forged body<br>1.4435 (BN2), forged body, Δ Fe < 0.5 %<br>1.4539, forged body<br>CW617N (brass)<br>EN-GJS-400-18-LT (GGG 40.3)<br>EN-GJS-400-18-LT (GGG 40.3) PFA lined<br>EN-GJS-400-18-LT (GGG 40.3) PP lined |
| 5 | CONEXO diaphragm RFID chip<br>(see Conexo information) | |
| 6 | CONEXO body RFID chip<br>(see Conexo information) | |
| 7 | CONEXO actuator RFID chip<br>(see Conexo information) | |

## GEMÜ CONEXO

The interaction of valve components that are equipped with RFID chips and an associated IT infrastructure actively increase process reliability.

Thanks to serialization, every valve and every relevant valve component such as the body, actuator or diaphragm, and even automation components, can be clearly traced and read using the CONEXO pen RFID reader. The CONEXO app, which can be installed on mobile devices, not only facilitates and improves the "installation qualification" process, but also makes the maintenance process much more transparent and easier to document. The app actively guides the maintenance technician through the maintenance schedule and directly provides him with all the information assigned to the valve, such as test reports, testing documentation and maintenance histories. The CONEXO portal acts as a central element, helping to collect, manage and process all data.

**For further information on GEMÜ CONEXO please visit:**
www.gemu-group.com/conexo

### Ordering

GEMÜ Conexo must be ordered separately with the ordering option "CONEXO".

# Availabilities

## Availability of grades of surface finish

**Internal surface finishes for forged and block material bodies [1)]**

| Readings for Process Contact Surfaces | Mechanically polished [2)] | | Electropolished | |
|---|---|---|---|---|
| | Hygienic class DIN 11866 | Code | Hygienic class DIN 11866 | Code |
| Ra ≤ 0.80 µm | H3 | 1502 | HE3 | 1503 |
| Ra ≤ 0.60 µm | - | 1507 | - | 1508 |
| Ra ≤ 0.40 µm | H4 | 1536 | HE4 | 1537 |
| Ra ≤ 0.25 µm [3)] | H5 | 1527 | HE5 | 1516 |

| Readings for Process Contact Surfaces according to ASME BPE 2016 [4)] | Mechanically polished [2)] | | Electropolished | |
|---|---|---|---|---|
| | ASME BPE Surface Designation | Code | ASME BPE Surface Designation | Code |
| Ra Max. = 0.76 µm (30 µinch) | SF3 | SF3 | - | - |
| Ra Max. = 0.64 µm (25 µinch) | SF2 | SF2 | SF6 | SF6 |
| Ra Max. = 0.51 µm (20 µinch) | SF1 | SF1 | SF5 | SF5 |
| Ra Max. = 0.38 µm (15 µinch) | - | - | SF4 | SF4 |

**Internal surface finishes for investment cast bodies**

| Readings for Process Contact Surfaces | Mechanically polished [2)] | |
|---|---|---|
| | Hygienic class DIN 11866 | Code |
| Ra ≤ 6.30 µm | - | 1500 |
| Ra ≤ 0.80 µm | H3 | 1502 |
| Ra ≤ 0.60 µm [5)] | - | 1507 |

Ra acc. to DIN EN ISO 4288 and ASME B46.1

1) Surface finishes of customized valve bodies may be limited in special cases.

2) Or any other finishing method that meets the Ra value (acc. to ASME BPE).

3) The smallest possible Ra finish for pipe connections with an internal pipe diameter < 6 mm is 0.38 µm.

4) When using these surfaces, the bodies are marked according to the specifications of ASME BPE.
The surfaces are only available for valve bodies which are made of materials (e.g. GEMÜ material codes 40, 41, F4, 44)) and use connections (e.g. GEMÜ connection codes 59, 80, 88) according to ASME BPE.

5) Not possible for GEMÜ connection code 59, DN 8 and GEMÜ connection code 0, DN 4.

# Availability of valve bodies

## Spigot

| | MG | DN | Connection type code [1] | | | | | | | | | | | | | | | | |
|---|---|---|---|---|---|---|---|---|---|---|---|---|---|---|---|---|---|---|---|
| | | | 0 | 16 | 17 | | 18 | 35 | 36 | 37 | | 55 | 59 | | 60 | | 63 | 64 | 65 |
| | | | Material code [2] | | | | | | | | | | | | | | | | |
| | | | 40, 42, F4 | 40, 42, F4 | C3 | 40, 42, F4 | 40, 42, F4 | 40, 42, F4 | 40, 42, F4 | C3 | 40, 42, F4 | 40, 42, F4 | C3 | 40, 42, F4 | C3 | 40, 42, F4 | 40, 42, F4 | 40, 42, F4 | 40, 42, F4 |
| **GEMÜ 611** | **10** | **10** | - | X | X | X | X | - | X | - | - | X | - | X | X | X | X | - | X |
| | | **15** | X | X | X | X | X | - | X | - | - | X | - | X | X | X | X | X | X |
| | | **20** | - | - | - | - | - | - | - | - | - | X | X | X | - | - | - | - | - |
| **GEMÜ 671** | **25** | **15** | X | X | X | X | X | - | X | - | - | - | - | - | X | X | X | X | X |
| | | **20** | X | X | X | X | X | - | X | - | - | X | X | X | X | X | X | X | X |
| | | **25** | X | X | X | X | X | X | X | X | X | - | X | X | X | X | X | X | X |
| | **40** | **32** | X | X | X | X | X | X | X | - | X | - | - | - | X | X | X | X | X |
| | | **40** | X | X | X | X | X | X | X | X | X | - | X | X | X | X | X | X | X |
| | **50** | **50** | X | X | X | X | X | X | X | X | X | - | X | X | X | X | X | X | X |
| | | **65** | - | - | - | - | - | X | - | - | X | - | - | X | - | - | - | - | - |
| | **80** | **65** | - | - | - | X | - | X | X | - | X | - | - | X | - | X | X | X | X |
| | | **80** | - | - | - | X | - | X | X | - | X | - | - | X | - | X | X | X | X |
| | **100** | **100** | - | - | - | X | - | X | X | - | X | - | - | X | - | X | X | X | X |

MG = diaphragm size, X = standard

1) **Connection type**
Code 0: Spigot DIN
Code 16: Spigot EN 10357 series B, formerly DIN 11850 series 1
Code 17: Spigot EN 10357 series A / DIN 11866 series A formerly DIN 11850 series 2
Code 18: Spigot DIN 11850 series 3
Code 35: Spigot JIS-G 3447
Code 36: Spigot JIS-G 3459 schedule 10s
Code 37: Spigot SMS 3008
Code 55: Spigot BS 4825, part 1
Code 59: Spigot ASME BPE/DIN 11866 series C
Code 60: Spigot ISO 1127/EN 10357 series C/DIN 11866 series B
Code 63: Spigot ANSI/ASME B36.19M schedule 10s
Code 64: Spigot ANSI/ASME B36.19M schedule 5s
Code 65: Spigot ANSI/ASME B36.19M schedule 40s

2) **Valve body material**
Code 40: 1.4435 (F316L), forged body
Code 42: 1.4435 (BN2), forged body, Δ Fe < 0.5%
Code C3: 1.4435, investment casting
Code F4: 1.4539, forged body

## *Threaded connection*

| | MG | DN | Connection type code [1] | | | | |
|---|---|---|---|---|---|---|---|
| | | | 1 | | | 31 | 6, 6K |
| | | | Material code [2] | | | | |
| | | | 12 | 37 | 90 | 37, 90 | 40, 42 |
| **GEMÜ 611** | **10** | **10** | - | - | - | - | W |
| | | **12** | X | X | - | - | - |
| | | **15** | X | X | - | - | W |
| **GEMÜ 671** | **25** | **15** | - | X | X | X | W |
| | | **20** | - | X | X | X | W |
| | | **25** | - | X | X | X | W |
| | **40** | **32** | - | X | X | X | W |
| | | **40** | - | X | X | X | W |
| | **50** | **50** | - | X | X | X | W |
| | **80** | **65** | - | - | - | - | W |
| | | **80** | - | - | - | - | W |

MG = diaphragm size, X = standard
W = welded assembly

1) **Connection type**
Code 1: Threaded socket DIN ISO 228
Code 31: NPT female thread
Code 6: Threaded spigot DIN 11851
Code 6K: Cone spigot and union nut DIN 11851

2) **Valve body material**
Code 12: CW614N, CW617N (brass)
Code 37: 1.4408, investment casting
Code 40: 1.4435 (F316L), forged body
Code 42: 1.4435 (BN2), forged body, Δ Fe < 0.5%
Code 90: EN-GJS-400-18-LT (GGG 40.3)

## *Flange*

| | MG | DN | Connection type code [1] | | | | | | | | | | | | |
|---|---|---|---|---|---|---|---|---|---|---|---|---|---|---|---|
| | | | 8 | | | | | 38 | | | 39 | | | | |
| | | | Material code [2] | | | | | | | | | | | | |
| | | | 17 | 18 | C3 | 39 | 40, 42 | 17 | 18 [3] | 39 | 17 | 18 | C3 | 39 | 40, 42 |
| **GEMÜ 671** | **25** | **15** | X | X | W | X | W | - | - | - | X | X | W | X | W |
| | | **20** | X | X | W | X | W | X | X | X | X | X | W | X | W |
| | | **25** | X | X | W | X | W | X | X | X | X | X | W | X | W |
| | **40** | **32** | X | X | W | X | W | - | - | - | X | X | W | X | W |
| | | **40** | X | X | W | X | W | X | X | X | X | X | W | X | W |
| | **50** | **50** | X | X | W | X | W | X | X | X | X | X | W | X | W |
| | **80** | **65** | - | - | - | - | W | - | - | - | - | - | - | - | W |
| | | **80** | X | X | - | X | W | X | X | X | X | X | - | X | W |
| | **100** | **100** | X | X | - | X | W | X | X | X | X | X | - | X | W |

MG = diaphragm size, X = standard
W = welded assembly

1) **Connection type**
Code 8: Flange EN 1092, PN 16, form B, face-to-face dimension FTF EN 558 series 1, ISO 5752, basic series 1, length only for body configuration D
Code 38: Flange ANSI Class 150 RF, face-to-face dimension FTF MSS SP-88, length only for body configuration D
Code 39: Flange ANSI Class 125/150 RF, face-to-face dimension FTF EN 558 series 1, ISO 5752, basic series 1, length only for body configuration D

2) **Valve body material**
Code 17: EN-GJS-400-18-LT (GGG 40.3), PFA lined
Code 18: EN-GJS-400-18-LT (GGG 40.3), PP lined
Code 39: 1.4408, PFA lined
Code 40: 1.4435 (F316L), forged body
Code 42: 1.4435 (BN2), forged body, Δ Fe < 0.5%
Code C3: 1.4435, investment casting

3) on request

## Clamp

| | MG | DN | Connection type code [1] | | | | |
|---|---|---|---|---|---|---|---|
| | | | 80, 8P | 82 | 88, 8T | 8A | 8E |
| | | | Material code [2] | | | | |
| | | | 40, 42, F4 | | | | |
| **GEMÜ 611** | **10** | **10** | - | K | - | K | - |
| | | **15** | K | W | K | K | - |
| | | **20** | K | - | K | - | - |
| **GEMÜ 671** | **25** | **15** | - | W | - | K | - |
| | | **20** | K | K | K | K | - |
| | | **25** | K | K | K | K | K |
| | **40** | **32** | - | W | - | K | K |
| | | **40** | K | W | K | K | K |
| | **50** | **50** | K | W | K | K | K |
| | | **65** | W | - | W | - | W |
| | **80** | **65** | K | K | K | K | K |
| | | **80** | K | W | K | W | K |
| | **100** | **100** | W | W | W | W | W |

MG = diaphragm size
K = connections completely machined (not welded)
W = welded assembly

1) **Connection type**
Code 80: Clamp ASME BPE, face-to-face dimension FTF ASME BPE, length only for body configuration D
Code 82: Clamp DIN 32676 series B, face-to-face dimension FTF EN 558 series 7, length only for body configuration D
Code 88: Clamp ASME BPE, for pipe ASME BPE, face-to-face dimension FTF EN 558 series 7, length only for body configuration D
Code 8A: Clamp DIN 32676 series A, face-to-face dimension FTF acc. to EN 558 series 7, length only for body configuration D
Code 8E: Clamp ISO 2852 for pipe ISO 2037, clamp SMS 3017 for pipe SMS 3008 face-to-face dimension FTF EN 558 series 7, length only for body configuration D
Code 8P: Clamp DIN 32676 series C, face-to-face dimension FTF ASME BPE, length only for body configuration D
Code 8T: Clamp DIN 32676 series C, face-to-face dimension FTF EN 558 series 7, length only for body configuration D

2) **Valve body material**
Code 40: 1.4435 (F316L), forged body
Code 42: 1.4435 (BN2), forged body, Δ Fe < 0.5%
Code F4: 1.4539, forged body

## Availability of product conformity

| | Diaphragm material code [1] | Body material code [2] |
|---|---|---|
| **Drinking water** | | |
| Belgaqua (B) | 28 | 37 |

1) **Diaphragm material**
Code 28: EPDM

2) **Valve body material**
Code 37: 1.4408, investment casting

# Order data

The order data provide an overview of standard configurations.

Please check the availability before ordering. Other configurations available on request.

## Order codes

| 1 Type | Code |
|---|---|
| Diaphragm valve, manually operated,<br>plastic handwheel,<br>optical position indicator | 611 |
| Diaphragm valve, manually operated,<br>plastic handwheel,<br>plastic distance piece,<br>optical position indicator | 671 |

| 2 DN | Code |
|---|---|
| GEMÜ 611 | |
| DN 10 | 10 |
| DN 12 | 12 |
| DN 15 | 15 |
| DN 20 | 20 |
| GEMÜ 671 | |
| DN 15 | 15 |
| DN 20 | 20 |
| DN 25 | 25 |
| DN 32 | 32 |
| DN 40 | 40 |
| DN 50 | 50 |
| DN 65 | 65 |
| DN 80 | 80 |
| DN 100 | 100 |

| 3 Body configuration | Code |
|---|---|
| 2/2-way body | D |

| 4 Connection type | Code |
|---|---|
| Spigot | |
| Spigot DIN | 0 |
| Spigot EN 10357 series B,<br>formerly DIN 11850 series 1 | 16 |
| Spigot EN 10357 series A / DIN 11866 series A<br>formerly DIN 11850 series 2 | 17 |
| Spigot DIN 11850 series 3 | 18 |
| Spigot JIS-G 3447 | 35 |
| Spigot JIS-G 3459 schedule 10s | 36 |
| Spigot SMS 3008 | 37 |
| Spigot BS 4825, part 1 | 55 |
| Spigot ASME BPE/DIN 11866 series C | 59 |
| Spigot ISO 1127/EN 10357 series C/DIN 11866 series B | 60 |
| Spigot ANSI/ASME B36.19M schedule 10s | 63 |
| Spigot ANSI/ASME B36.19M schedule 5s | 64 |
| Spigot ANSI/ASME B36.19M schedule 40s | 65 |
| Threaded connection | |
| Threaded socket DIN ISO 228 | 1 |
| NPT female thread | 31 |

| 4 Connection type | Code |
|---|---|
| Threaded spigot DIN 11851 | 6 |
| Cone spigot and union nut DIN 11851 | 6K |
| Flange | |
| Flange EN 1092, PN 16, form B,<br>face-to-face dimension FTF EN 558 series 1, ISO 5752,<br>basic series 1,<br>length only for body configuration D | 8 |
| Flange ANSI Class 150 RF,<br>face-to-face dimension FTF MSS SP-88,<br>length only for body configuration D | 38 |
| Flange ANSI Class 125/150 RF,<br>face-to-face dimension FTF EN 558 series 1, ISO 5752,<br>basic series 1,<br>length only for body configuration D | 39 |
| Clamp | |
| Clamp ASME BPE,<br>face-to-face dimension FTF ASME BPE,<br>length only for body configuration D | 80 |
| Clamp DIN 32676 series B,<br>face-to-face dimension FTF EN 558 series 7,<br>length only for body configuration D | 82 |
| Clamp ASME BPE,<br>for pipe ASME BPE,<br>face-to-face dimension FTF EN 558 series 7,<br>length only for body configuration D | 88 |
| Clamp DIN 32676 series A,<br>face-to-face dimension FTF acc. to EN 558 series 7,<br>length only for body configuration D | 8A |
| Clamp ISO 2852 for pipe ISO 2037,<br>clamp SMS 3017 for pipe SMS 3008<br>face-to-face dimension FTF EN 558 series 7,<br>length only for body configuration D | 8E |
| Clamp DIN 32676 series C,<br>face-to-face dimension FTF ASME BPE,<br>length only for body configuration D | 8P |
| Clamp DIN 32676 series C,<br>face-to-face dimension FTF EN 558 series 7,<br>length only for body configuration D | 8T |

| 5 Valve body material | Code |
|---|---|
| SG iron material | |
| EN-GJS-400-18-LT (GGG 40.3),<br>PFA lined | 17 |
| EN-GJS-400-18-LT (GGG 40.3),<br>PP lined | 18 |
| EN-GJS-400-18-LT (GGG 40.3) | 90 |
| Investment casting material | |
| 1.4408, investment casting | 37 |
| 1.4408, PFA lined | 39 |
| 1.4435, investment casting | C3 |

| 5 Valve body material | Code |
|---|---|
| **Forged material** | |
| 1.4435 (F316L), forged body | 40 |
| 1.4435 (BN2), forged body, Δ Fe < 0.5% | 42 |
| 1.4539, forged body | F4 |
| **Brass** | |
| CW614N, CW617N (brass) | 12 |

| 6 Diaphragm material | Code |
|---|---|
| **Elastomer** | |
| FKM | 4 |
| EPDM | 13 |
| EPDM | 17 |
| EPDM | 19 |
| EPDM | 28 |
| EPDM | 29 |
| EPDM | 36 |
| **PTFE** | |
| PTFE/EPDM one-piece | 54 |
| PTFE/EPDM two-piece | 5M |
| PTFE/PVDF/EPDM three-piece | 71 |
| **Note:** The PTFE/EPDM diaphragm (code 5M) is available from diaphragm size 25. | |
| **Note:** The PTFE/PVDF/EPDM diaphragm (code 71) can only be combined with PFA lined valve bodies. | |

| 7 Control function | Code |
|---|---|
| **GEMÜ 611 and GEMÜ 671** | |
| Manually operated | 0 |
| **GEMÜ 671** | |
| Manually operated, with lockable handwheel | L |

| 8 Actuator version | Code |
|---|---|
| **GEMÜ 611** | |
| Actuator size 2 | 2 |
| **GEMÜ 671** | |
| Actuator size 2 | 2 |
| Actuator size 3 | 3 |
| Actuator size 4 | 4 |
| Thread for mounting of electrical position indicator GEMÜ 1215 | 2Z |
| Thread for mounting of electrical position indicator GEMÜ 1215 | 3Z |
| Thread for mounting of electrical position indicator GEMÜ 1215 | 4Z |
| Thread for mounting of electrical position indicator GEMÜ 1215 | 5Z |
| Thread for mounting of electrical position indicator GEMÜ 1215 | 6Z |

| 9 Surface | Code |
|---|---|
| Ra ≤ 6.3 µm (250 µin.) for media wetted surfaces, mechanically polished internal | 1500 |
| Ra ≤ 0.8 µm (30 µin.) for media wetted surfaces, in accordance with DIN 11866 H3, mechanically polished internal | 1502 |

| 9 Surface | Code |
|---|---|
| Ra ≤ 0.8 µm (30 µin.) for media wetted surfaces, in accordance with DIN 11866 HE3, electropolished internal/external | 1503 |
| Ra ≤ 0.6 µm (25 µin.) for media wetted surfaces, mechanically polished internal | 1507 |
| Ra ≤ 0.6 µm (25 µin.) for media wetted surfaces, electropolished internal/external | 1508 |
| Ra ≤ 0.25 µm (10 µin.) for media wetted surfaces *), in accordance with DIN 11866 HE5, electropolished internal/external, *) for inner pipe diameters < 6 mm, in the spigot Ra ≤ 0.38 µm | 1516 |
| Ra ≤ 0.25 µm (10 µin.) for media wetted surfaces *), in accordance with DIN 11866 H5, mechanically polished internal, *) for inner pipe diameters < 6 mm, in the spigot Ra ≤ 0.38 µm | 1527 |
| Ra ≤ 0.4 µm (15 µin.) for media wetted surfaces, in accordance with DIN 11866 H4, mechanically polished internal | 1536 |
| Ra ≤ 0.4 µm (15 µin.) for media wetted surfaces, in accordance with DIN 11866 HE4, electropolished internal/external | 1537 |
| Ra max. 0.51 µm (20 µin.) for media wetted surfaces, in accordance with ASME BPE SF1, mechanically polished internal | SF1 |
| Ra max. 0.64 µm (25 µin.) for media wetted surfaces, in accordance with ASME BPE SF2, mechanically polished internal | SF2 |
| Ra max. 0.76 µm (30 µin.) for media wetted surfaces, in accordance with ASME BPE SF3, mechanically polished internal | SF3 |
| Ra max. 0.38 µm (15 µin.) for media wetted surfaces, in accordance with ASME BPE SF4, electropolished internal/external | SF4 |
| Ra max. 0.51 µm (20 µin.) for media wetted surfaces, in accordance with ASME BPE SF5, electropolished internal/external | SF5 |
| Ra max. 0.64 µm (25 µin.) for media wetted surfaces, in accordance with ASME BPE SF6, electropolished internal/external | SF6 |

| 10 Special version | Code |
|---|---|
| Without | |
| BELGAQUA certification | B |
| Special version for oxygen, maximum medium temperature: 60 °C | S |

| 11 CONEXO | Code |
|---|---|
| Without | |
| Integrated RFID chip for electronic identification and traceability | C |

## Order example

| Ordering option | Code | Description |
|---|---|---|
| 1 Type | 671 | Diaphragm valve, manually operated,<br>plastic handwheel,<br>plastic distance piece,<br>optical position indicator |
| 2 DN | 25 | DN 25 |
| 3 Body configuration | D | 2/2-way body |
| 4 Connection type | 60 | Spigot ISO 1127/EN 10357 series C/DIN 11866 series B |
| 5 Valve body material | C3 | 1.4435, investment casting |
| 6 Diaphragm material | 17 | EPDM |
| 7 Control function | 0 | Manually operated |
| 8 Actuator version | 2 | Actuator size 2 |
| 9 Surface | 1500 | Ra ≤ 6.3 µm (250 µin.) for media wetted surfaces,<br>mechanically polished internal |
| 10 Special version | S | Special version for oxygen,<br>maximum medium temperature: 60 °C |
| 11 CONEXO | | Without |

# Technical data

## Medium

**Working medium:** Corrosive, inert, gaseous and liquid media which have no negative impact on the physical and chemical properties of the body and diaphragm material.

For special oxygen version (code S):only gaseous oxygen

## Temperature

**Media temperature:**

| Diaphragm material | Standard | Special version for oxygen |
|---|---|---|
| FKM (Code 4) | -10 — 80 °C | - |
| EPDM (Code 13) | -10 — 80 °C | 0 — 60 °C |
| EPDM (Code 17) | -10 — 80 °C | - |
| EPDM (Code 19) | -10 — 80 °C | 0 — 60 °C |
| EPDM (code 28) | -10 — 80 °C | - |
| EPDM (Code 29) | -10 — 80 °C | - |
| EPDM (Code 36) | -10 — 80 °C | - |
| PTFE/EPDM (Code 54) | -10 — 80 °C | 0 — 60 °C |
| PTFE/PVDF/EPDM (Code 71) | -10 — 80 °C | - |
| PTFE/EPDM (Code 5M) | -10 — 80 °C | 0 — 60 °C |

**Ambient temperature:** 0 — 60 °C

**Storage temperature:** 0 — 40 °C

## Pressure

**Operating pressure:**

| | MG | DN | Diaphragm material | |
|---|---|---|---|---|
| | | | Elastomer | PTFE |
| **GEMÜ 611** | **10** | **10 - 20** | 0 - 10 | 0 - 6 |
| **GEMÜ 671** | **25 - 100** | **15 - 100** | 0 - 10 | 0 - 6 |

MG = diaphragm size
All pressures are gauge pressures. Operating pressure values were determined with static operating pressure applied on one side of a closed valve. Sealing at the valve seat and atmospheric sealing is ensured for the given values.
Information on operating pressures applied on both sides and for high purity media on request.

**Pressure rating:** PN 16

**Leakage rate:** Leakage rate A to P11/P12 EN 12266-1

**Kv values:**

| MG | DN | Connection type code | | | | | | |
|---|---|---|---|---|---|---|---|---|
| | | 0 | 16 | 17 | 18 | 37 | 59 | 60 |
| **10** | **10** | - | 2.4 | 2.4 | 2.4 | - | 2.2 | 3.3 |
| | **12** | - | - | - | - | - | - | - |
| | **15** | 3.3 | 3.8 | 3.8 | 3.8 | - | 2.2 | 4.0 |
| | **20** | - | - | - | - | - | 3.8 | - |
| **25** | **15** | 4.1 | 4.7 | 4.7 | 4.7 | - | - | 7.4 |
| | **20** | 6.3 | 7.0 | 7.0 | 7.0 | - | 4.4 | 13.2 |
| | **25** | 13.9 | 15.0 | 15.0 | 15.0 | 12.6 | 12.2 | 16.2 |
| **40** | **32** | 25.3 | 27.0 | 27.0 | 27.0 | 26.2 | - | 30.0 |
| | **40** | 29.3 | 30.9 | 30.9 | 30.9 | 30.2 | 29.5 | 32.8 |
| **50** | **50** | 46.5 | 48.4 | 48.4 | 48.4 | 51.7 | 50.6 | 55.2 |
| | **65** | - | - | - | - | 62.2 | 61.8 | - |
| **80** | **65** | - | - | 77.0 | - | 68.5 | 68.5 | 96.0 |
| | **80** | - | - | 111.0 | - | 80.0 | 87.0 | 111.0 |
| **100** | **100** | - | - | 194.0 | - | 173.0 | 188.0 | 214.0 |

MG = diaphragm size
Kv values in m³/h
Kv values determined in accordance with DIN EN 60534 standard, inlet pressure 5 bar, Δp 1 bar, stainless steel valve body and soft elastomer diaphragm. The Kv values for other product configurations (e.g. other diaphragm or body materials) may differ. In general, all diaphragms are subject to the influences of pressure, temperature, the process and their tightening torques. Therefore the Kv values may exceed the tolerance limits of the standard.

| MG | DN | SG iron 40.3 connection type 1, 31 | PFA / PP | Investment casting connection type 1, 31 |
|---|---|---|---|---|
| **25** | **15** | 8.0 | 5.0 | 6.5 |
| | **20** | 11.5 | 9.0 | 10.0 |
| | **25** | 11.5 | 13.0 | 14.0 |
| **40** | **32** | 28.0 | 23.0 | 26.0 |
| | **40** | 28.0 | 26.0 | 33.0 |
| **50** | **50** | 60.0 | 47.0 | 60.0 |

MG = diaphragm size, Kv values in m³/h
Kv values determined in accordance with DIN EN 60534, inlet pressure 5 bar, Δp 1 bar, with connection flange EN 1092 length EN 558 series 1 (or threaded socket DIN ISO 228 for body material GGG40.3) and soft elastomer diaphragm. The Kv values for other product configurations (e.g. other diaphragm or body materials) may differ. In general, all diaphragms are subject to the influences of pressure, temperature, the process and their tightening torques. Therefore the Kv values may exceed the tolerance limits of the standard.
The Kv value curve (Kv value dependent on valve stroke) can vary depending on the diaphragm material and duration of use.

## Product conformity

**Machinery Directive:** 2006/42/EC

**Pressure Equipment Directive:** 2014/68/EU

**Food:**
Regulation (EC) No. 1935/2006
Regulation (EC) No. 10/2011*
FDA*
USP* Class VI

**Drinking water:**
Belgaqua*
* depending on version and / or operating parameters

## Mechanical data

**Weight:**

**GEMÜ 611 actuator**

0.15 kg

**GEMÜ 671 actuator**

| MG | DN | Weight |
|---|---|---|
| **25** | **15 – 25** | 0.4 |
| **40** | **32 – 40** | 0.6 |
| **50** | **50 – 65** | 1.0 |
| **80** | **65 – 80** | 3.8 |
| **100** | **100** | 5.1 |

Weights in kg
MG = diaphragm size

**Weight:**

**Body**

| MG | DN | Spigot | Threaded socket | Threaded spigot, cone spigot | Flange | Clamp |
|---|---|---|---|---|---|---|
| | | Connection type code | | | | |
| | | 0, 16, 17, 18, 35, 36, 37, 55, 59, 60, 63, 64, 65 | 1, 31 | 6, 6K | 8, 38, 39 | 80, 82, 88, 8A , 8E, 8P, 8T |
| **10** | **10** | 0.30 | - | 0.33 | - | 0.30 |
| | **12** | - | 0.17 | - | - | - |
| | **15** | 0.30 | 0.26 | 0.35 | - | 0.43 |
| | **20** | 0.30 | - | - | - | 0.43 |
| **25** | **15** | 0.62 | 0.32 | 0.71 | 1.85 | 0.75 |
| | **20** | 0.58 | 0.34 | 0.78 | 2.35 | 0.71 |
| | **25** | 0.55 | 0.39 | 0.79 | 2.85 | 0.63 |
| **40** | **32** | 1.45 | 0.88 | 1.66 | 4.90 | 1.62 |
| | **40** | 1.32 | 0.93 | 1.62 | 5.65 | 1.50 |
| **50** | **50** | 2.25 | 1.56 | 2.70 | 7.45 | 2.50 |
| | **65** | 2.20 | - | - | - | 2.30 |
| **80** | **65** | 8.60 | - | 9.22 | 10.20 | 8.90 |
| | **80** | 8.00 | - | 9.20 | 14.20 | 8.50 |
| **100** | **100** | 24.10 | - | - | 21.00 | 24.80 |

Weights in kg
MG = diaphragm size

# Dimensions

## Actuator dimensions

### GEMÜ 611

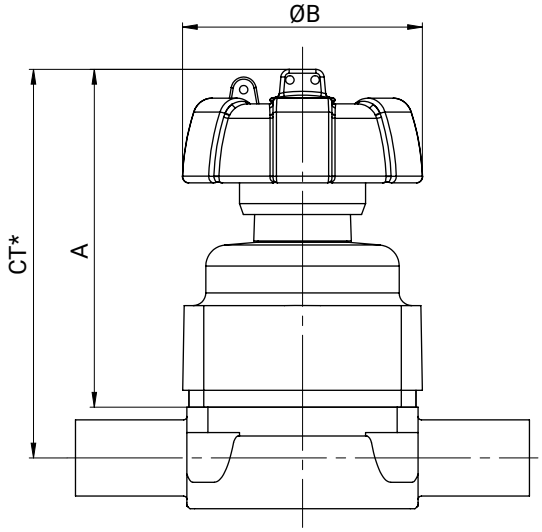


| MG | DN | A | ØB |
|---|---|---|---|
| **10** | 10 - 20 | 80.0 | 60.0 |

Dimensions in mm
MG = diaphragm size
* CT = A + H1 (see body dimensions)

### GEMÜ 671

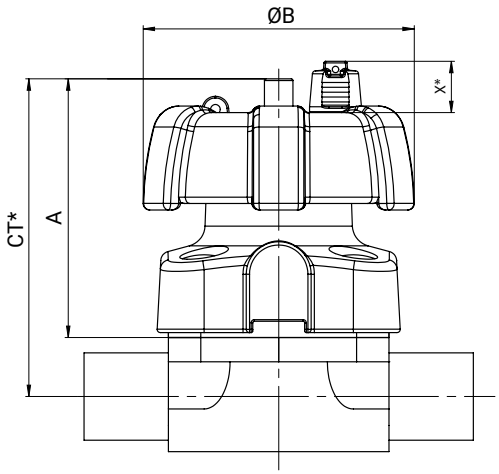


Special version - Accessory Code Z

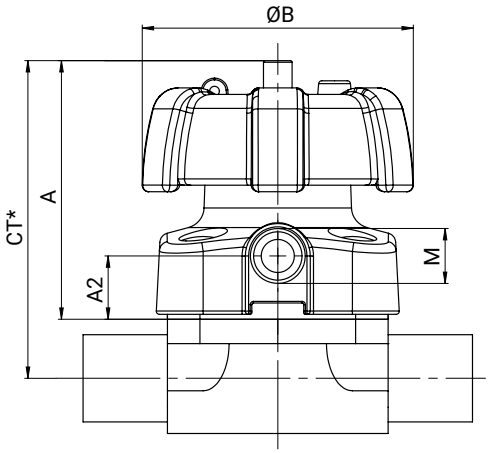


| MG | DN | ØB | A | A2 | M | X* |
|---|---|---|---|---|---|---|
| **25** | 15 - 25 | 90.0 | 79.0 | 20.0 | M16x1 | 14.0 |
| **40** | 32 - 40 | 114.0 | 99.0 | 24.0 | M16x1 | 14.0 |
| **50** | 50 - 65 | 140.0 | 119.0 | 28.0 | M16x1 | 8.0 |
| **80** | 65 - 80 | 214.0 | 167.0 | 42.0 | M16x1 | 17.0 |
| **100** | 100 | 214.0 | 216.0 | 58.0 | M16x1 | 25.0 |

Dimensions in mm
MG = diaphragm size
* CT = A + H1 (see body dimensions)

* only for control function code L

# Body dimensions

## Spigot DIN/EN/ISO (code 0, 16, 17, 18, 60)

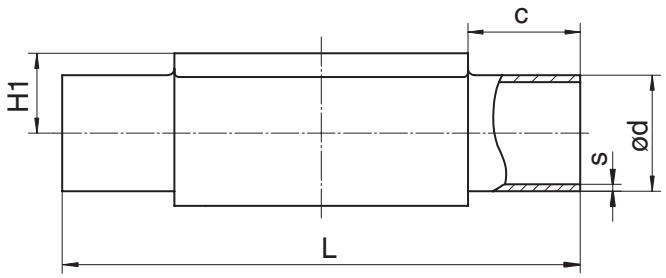


**Connection type spigot DIN/EN/ISO (code 0, 16, 17, 18, 60) [1], forged material (code 40, 42, F4) [2]**

| | MG | DN | NPS | c (min) | ød | | | | | H1 | L | s | | | | |
|---|---|---|---|---|---|---|---|---|---|---|---|---|---|---|---|---|
| | | | | | Connection type | | | | | | | Connection type | | | | |
| | | | | | 0 | 16 | 17 | 18 | 60 | | | 0 | 16 | 17 | 18 | 60 |
| **GEMÜ 611** | **10** | **10** | **3/8"** | 25.0 | - | 12.0 | 13.0 | 14.0 | 17.2 | 12.5 | 108.0 | - | 1.0 | 1.5 | 2.0 | 1.6 |
| | | **15** | **1/2"** | 25.0 | 18.0 | 18.0 | 19.0 | 20.0 | 21.3 | 12.5 | 108.0 | 1.5 | 1.0 | 1.5 | 2.0 | 1.6 |
| **GEMÜ 671** | **25** | **15** | **1/2"** | 25.0 | 18.0 | 18.0 | 19.0 | 20.0 | 21.3 | 19.0 | 120.0 | 1.5 | 1.0 | 1.5 | 2.0 | 1.6 |
| | | **20** | **3/4"** | 25.0 | 22.0 | 22.0 | 23.0 | 24.0 | 26.9 | 19.0 | 120.0 | 1.5 | 1.0 | 1.5 | 2.0 | 1.6 |
| | | **25** | **1"** | 25.0 | 28.0 | 28.0 | 29.0 | 30.0 | 33.7 | 19.0 | 120.0 | 1.5 | 1.0 | 1.5 | 2.0 | 2.0 |
| | **40** | **32** | **1¼"** | 25.0 | 34.0 | 34.0 | 35.0 | 36.0 | 42.4 | 26.0 | 153.0 | 1.5 | 1.0 | 1.5 | 2.0 | 2.0 |
| | | **40** | **1½"** | 25.0 | 40.0 | 40.0 | 41.0 | 42.0 | 48.3 | 26.0 | 153.0 | 1.5 | 1.0 | 1.5 | 2.0 | 2.0 |
| | **50** | **50** | **2"** | 30.0 | 52.0 | 52.0 | 53.0 | 54.0 | 60.3 | 32.0 | 173.0 | 1.5 | 1.0 | 1.5 | 2.0 | 2.0 |
| | **80** | **65** | **2½"** | 30.0 | - | - | 70.0 | - | 76.1 | 62.0 | 216.0 | - | - | 2.0 | - | 2.0 |
| | | **80** | **3"** | 30.0 | - | - | 85.0 | - | 88.9 | 62.0 | 254.0 | - | - | 2.0 | - | 2.3 |
| | **100** | **100** | **4"** | 30.0 | - | - | 104.0 | - | 114.3 | 76.0 | 305.0 | - | - | 2.0 | - | 2.3 |

Dimensions in mm
MG = diaphragm size

1) **Connection type**
Code 0: Spigot DIN
Code 16: Spigot EN 10357 series B, formerly DIN 11850 series 1
Code 17: Spigot EN 10357 series A / DIN 11866 series A formerly DIN 11850 series 2
Code 18: Spigot DIN 11850 series 3
Code 60: Spigot ISO 1127/EN 10357 series C/DIN 11866 series B

2) **Valve body material**
Code 40: 1.4435 (F316L), forged body
Code 42: 1.4435 (BN2), forged body, Δ Fe < 0.5%
Code F4: 1.4539, forged body

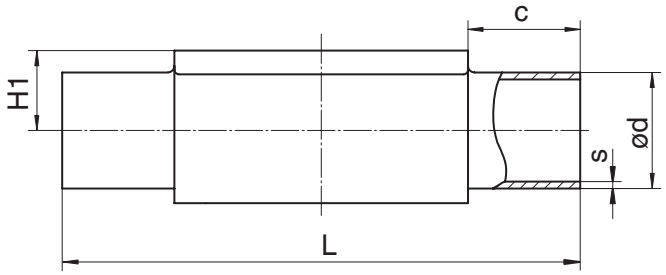


**Connection type spigot DIN/EN/ISO (code 17, 60) [1], investment casting material (code C3) [2]**

| | MG | DN | NPS | c (min) | ød | | H1 | L | s | |
|---|---|---|---|---|---|---|---|---|---|---|
| | | | | | Connection type | | | | Connection type | |
| | | | | | 17 | 60 | | | 17 | 60 |
| **GEMÜ 611** | **10** | **10** | **3/8"** | 25.0 | 13.0 | 17.2 | 12.5 | 108.0 | 1.5 | 1.6 |
| | | **15** | **1/2"** | 25.0 | 19.0 | 21.3 | 12.5 | 108.0 | 1.5 | 1.6 |
| **GEMÜ 671** | **25** | **15** | **1/2"** | 25.0 | 19.0 | 21.3 | 13.0 | 120.0 | 1.5 | 1.6 |
| | | **20** | **3/4"** | 25.0 | 23.0 | 26.9 | 16.0 | 120.0 | 1.5 | 1.6 |
| | | **25** | **1"** | 25.0 | 29.0 | 33.7 | 19.0 | 120.0 | 1.5 | 2.0 |
| | **40** | **32** | **1¼"** | 25.0 | 35.0 | 42.4 | 24.0 | 153.0 | 1.5 | 2.0 |
| | | **40** | **1½"** | 25.0 | 41.0 | 48.3 | 26.0 | 153.0 | 1.5 | 2.0 |
| | **50** | **50** | **2"** | 30.0 | 53.0 | 60.3 | 32.0 | 173.0 | 1.5 | 2.0 |

Dimensions in mm
MG = diaphragm size

1) **Connection type**
Code 17: Spigot EN 10357 series A / DIN 11866 series A formerly DIN 11850 series 2
Code 60: Spigot ISO 1127/EN 10357 series C/DIN 11866 series B

2) **Valve body material**
Code C3: 1.4435, investment casting

## *Spigot ASME/BS (code 55, 59, 63, 64, 65)*

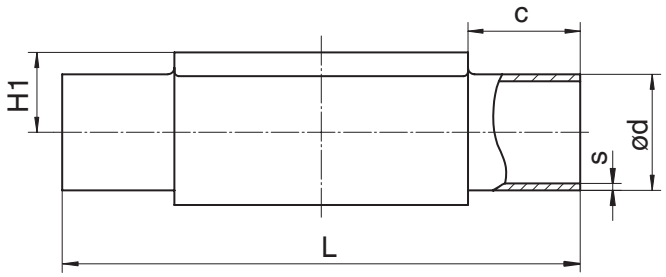


**Connection type spigot ASME/BS (code 55, 59, 63, 64, 65) [1], forged material (code 40, 42, F4) [2]**

| | MG | DN | NPS | c (min) | ød | | | | | H1 | L | s | | | | |
|---|---|---|---|---|---|---|---|---|---|---|---|---|---|---|---|---|
| | | | | | Connection type | | | | | | | Connection type | | | | |
| | | | | | 55 | 59 | 63 | 64 | 65 | | | 55 | 59 | 63 | 64 | 65 |
| **GEMÜ 611** | **10** | **10** | **3/8"** | 25.0 | 9.53 | 9.53 | 17.1 | - | 17.1 | 12.5 | 108.0 | 1.2 | 0.89 | 1.65 | - | 2.31 |
| | | **15** | **1/2"** | 25.0 | 12.70 | 12.70 | 21.3 | 21.3 | 21.3 | 12.5 | 108.0 | 1.2 | 1.65 | 2.11 | 1.65 | 2.77 |
| | | **20** | **3/4"** | 25.0 | 19.05 | 19.05 | - | - | - | 12.5 | 108.0 | 1.2 | 1.65 | - | - | - |
| **GEMÜ 671** | **25** | **15** | **1/2"** | 25.0 | - | - | 21.3 | 21.3 | 21.3 | 19.0 | 120.0 | - | - | 2.11 | 1.65 | 2.77 |
| | | **20** | **3/4"** | 25.0 | 19.05 | 19.05 | 26.7 | 26.7 | 26.7 | 19.0 | 120.0 | 1.2 | 1.65 | 2.11 | 1.65 | 2.87 |
| | | **25** | **1"** | 25.0 | - | 25.40 | 33.4 | 33.4 | 33.4 | 19.0 | 120.0 | - | 1.65 | 2.77 | 1.65 | 3.38 |
| | **40** | **32** | **1¼"** | 25.0 | - | - | 42.2 | 42.2 | 42.2 | 26.0 | 153.0 | - | - | 2.77 | 1.65 | 3.56 |
| | | **40** | **1½"** | 25.0 | - | 38.10 | 48.3 | 48.3 | 48.3 | 26.0 | 153.0 | - | 1.65 | 2.77 | 1.65 | 3.68 |
| | **50** | **50** | **2"** | 30.0 | - | 50.80 | 60.3 | 60.3 | 60.3 | 32.0 | 173.0 | - | 1.65 | 2.77 | 1.65 | 3.91 |
| | | **65** | **2½"** | 30.0 | - | 63.50 | - | - | - | 34.0 | 173.0 | - | 1.65 | - | - | - |
| | **80** | **65** | **2½"** | 30.0 | - | 63.50 | 73.0 | 73.0 | 73.0 | 62.0 | 216.0 | - | 1.65 | 3.05 | 2.11 | 5.16 |
| | | **80** | **3"** | 30.0 | - | 76.20 | 88.9 | 88.9 | 88.9 | 62.0 | 254.0 | - | 1.65 | 3.05 | 2.11 | 5.49 |
| | **100** | **100** | **4"** | 30.0 | - | 101.60 | 114.3 | 114.3 | 114.3 | 76.0 | 305.0 | - | 2.11 | 3.05 | 2.11 | 6.02 |

Dimensions in mm
MG = diaphragm size

1) **Connection type**
Code 55: Spigot BS 4825, part 1
Code 59: Spigot ASME BPE/DIN 11866 series C
Code 63: Spigot ANSI/ASME B36.19M schedule 10s
Code 64: Spigot ANSI/ASME B36.19M schedule 5s
Code 65: Spigot ANSI/ASME B36.19M schedule 40s

2) **Valve body material**
Code 40: 1.4435 (F316L), forged body
Code 42: 1.4435 (BN2), forged body, Δ Fe < 0.5%
Code F4: 1.4539, forged body

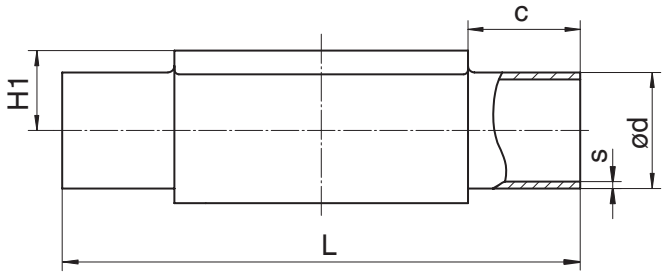


**Connection type spigot ASME BPE (code 59) [1], investment casting material (code C3) [2]**

| | MG | DN | NPS | c (min) | ød | H1 | L | s |
|---|---|---|---|---|---|---|---|---|
| **GEMÜ 611** | **10** | **20** | **3/4"** | 25.0 | 19.05 | 12.5 | 108.0 | 1.65 |
| **GEMÜ 671** | **25** | **20** | **3/4"** | 25.0 | 19.05 | 16.0 | 120.0 | 1.65 |
| | | **25** | **1"** | 25.0 | 25.40 | 19.0 | 120.0 | 1.65 |
| | **40** | **40** | **1½"** | 25.0 | 38.10 | 26.0 | 153.0 | 1.65 |
| | **50** | **50** | **2"** | 30.0 | 50.80 | 32.0 | 173.0 | 1.65 |

Dimensions in mm
MG = diaphragm size

1) **Connection type**
Code 59: Spigot ASME BPE/DIN 11866 series C

2) **Valve body material**
Code C3: 1.4435, investment casting

## *Spigot JIS/SMS (code 35, 36, 37)*

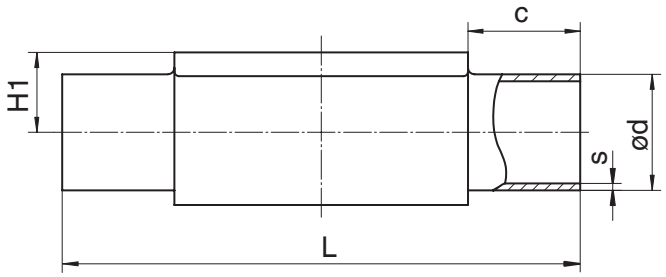


**Connection type spigot JIS/SMS (code 35, 36, 37) [1], forged material (code 40, 42, F4) [2]**

| | MG | DN | NPS | c (min) | ød | | | H1 | L | s | | |
|---|---|---|---|---|---|---|---|---|---|---|---|---|
| | | | | | Connection type | | | | | Connection type | | |
| | | | | | 35 | 36 | 37 | | | 35 | 36 | 37 |
| **GEMÜ 611** | **10** | **10** | **3/8"** | 25.0 | - | 17.3 | - | 12.5 | 108.0 | - | 1.65 | - |
| | | **15** | **1/2"** | 25.0 | - | 21.7 | - | 12.5 | 108.0 | - | 2.10 | - |
| **GEMÜ 671** | **25** | **15** | **1/2"** | 25.0 | - | 21.7 | - | 19.0 | 120.0 | - | 2.10 | - |
| | | **20** | **3/4"** | 25.0 | - | 27.2 | - | 19.0 | 120.0 | - | 2.10 | - |
| | | **25** | **1"** | 25.0 | 25.4 | 34.0 | 25.0 | 19.0 | 120.0 | 1.2 | 2.80 | 1.2 |
| | **40** | **32** | **1¼"** | 25.0 | 31.8 | 42.7 | 33.7 | 26.0 | 153.0 | 1.2 | 2.80 | 1.2 |
| | | **40** | **1½"** | 25.0 | 38.1 | 48.6 | 38.0 | 26.0 | 153.0 | 1.2 | 2.80 | 1.2 |
| | **50** | **50** | **2"** | 30.0 | 50.8 | 60.5 | 51.0 | 32.0 | 173.0 | 1.5 | 2.80 | 1.2 |
| | | **65** | **2½"** | 30.0 | 63.5 | - | 63.5 | 34.0 | 173.0 | 2.0 | - | 1.6 |
| | **80** | **65** | **2½"** | 30.0 | 63.5 | 76.3 | 63.5 | 62.0 | 216.0 | 2.0 | 3.00 | 1.6 |
| | | **80** | **3"** | 30.0 | 76.3 | 89.1 | 76.1 | 62.0 | 254.0 | 2.0 | 3.00 | 1.6 |
| | **100** | **100** | **4"** | 30.0 | 101.6 | 114.3 | 101.6 | 76.0 | 305.0 | 2.0 | 3.00 | 2.0 |

**Connection type spigot SMS (code 37), investment casting material (code C3) [2]**

| | MG | DN | NPS | c (min) | ød | H1 | L | s |
|---|---|---|---|---|---|---|---|---|
| **GEMÜ 671** | **25** | **25** | **1"** | 25.0 | 25.0 | 19.0 | 120.0 | 1.2 |
| | **40** | **40** | **1½"** | 25.0 | 38.0 | 26.0 | 153.0 | 1.2 |
| | **50** | **50** | **2"** | 30.0 | 51.0 | 32.0 | 173.0 | 1.2 |

Dimensions in mm
MG = diaphragm size

1) **Connection type**
Code 35: Spigot JIS-G 3447
Code 36: Spigot JIS-G 3459 schedule 10s
Code 37: Spigot SMS 3008

2) **Valve body material**
Code 40: 1.4435 (F316L), forged body
Code 42: 1.4435 (BN2), forged body, Δ Fe < 0.5%
Code C3: 1.4435, investment casting
Code F4: 1.4539, forged body

## *Threaded socket DIN (code 1)*

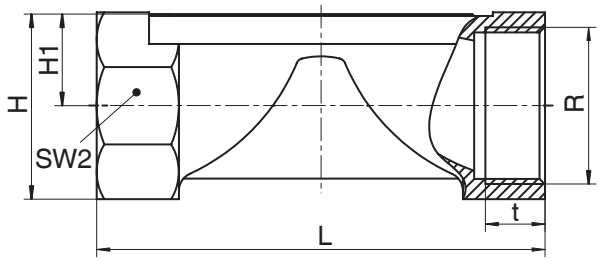


**Connection type threaded socket (code 1) [1], brass material (code 12)**

| | MG | DN | NPS | H | H1 | L | n | R | SW 2 | t |
|---|---|---|---|---|---|---|---|---|---|---|
| **GEMÜ 611** | **10** | **12** | **3/8"** | 23.0 | 11.0 | 55.0 | 2.0 | G 3/8 | 22.0 | 13.0 |
| | | **15** | **1/2"** | 29.0 | 14.0 | 75.0 | 2.0 | G 1/2 | 25.0 | 15.0 |

**Connection type threaded socket (code 1) [1], investment casting material (code 37)**

| | MG | DN | NPS | H | H1 | L | n | R | SW 2 | t |
|---|---|---|---|---|---|---|---|---|---|---|
| **GEMÜ 611** | **10** | **12** | **3/8"** | 25.0 | 13.0 | 55.0 | 2 | G 3/8 | 22.0 | 12.0 |
| | | **15** | **1/2"** | 30.0 | 15.0 | 68.0 | 2 | G 1/2 | 27.0 | 15.0 |
| **GEMÜ 671** | **25** | **15** | **1/2"** | 28.3 | 14.8 | 85.0 | 6 | G 1/2 | 27.0 | 15.0 |
| | | **20** | **3/4"** | 33.3 | 17.3 | 85.0 | 6 | G 3/4 | 32.0 | 16.0 |
| | | **25** | **1"** | 42.3 | 21.8 | 110.0 | 6 | G 1 | 41.0 | 13.0 |
| | **40** | **32** | **1¼"** | 51.3 | 26.3 | 120.0 | 8 | G 1¼ | 50.0 | 20.0 |
| | | **40** | **1½"** | 56.3 | 28.8 | 140.0 | 8 | G 1½ | 55.0 | 18.0 |
| | **50** | **50** | **2"** | 71.3 | 36.0 | 165.0 | 8 | G 2 | 70.0 | 26.0 |

**Connection type threaded socket (code 1) [1], SG iron material (code 90) [2]**

| | MG | DN | NPS | H | H1 | L | n | R | SW 2 | t |
|---|---|---|---|---|---|---|---|---|---|---|
| **GEMÜ 671** | **25** | **15** | **1/2"** | 32.7 | 16.7 | 85.0 | 6 | G 1/2 | 32 | 15.0 |
| | | **20** | **3/4"** | 42.0 | 21.5 | 85.0 | 6 | G 3/4 | 41 | 16.3 |
| | | **25** | **1"** | 46.7 | 23.7 | 110.0 | 6 | G 1 | 46 | 19.1 |
| | **40** | **32** | **1¼"** | 56.0 | 28.5 | 120.0 | 6 | G 1¼ | 55 | 21.4 |
| | | **40** | **1½"** | 66.0 | 33.5 | 140.0 | 6 | G 1½ | 65 | 21.4 |
| | **50** | **50** | **2"** | 76.0 | 38.5 | 165.0 | 6 | G 2 | 75 | 25.7 |

Dimensions in mm
MG = diaphragm size
n = number of flats

1) **Connection type**
Code 1: Threaded socket DIN ISO 228

2) **Valve body material**
Code 12: CW614N, CW617N (brass)
Code 37: 1.4408, investment casting
Code 90: EN-GJS-400-18-LT (GGG 40.3)

## *Threaded socket NPT (code 31)*

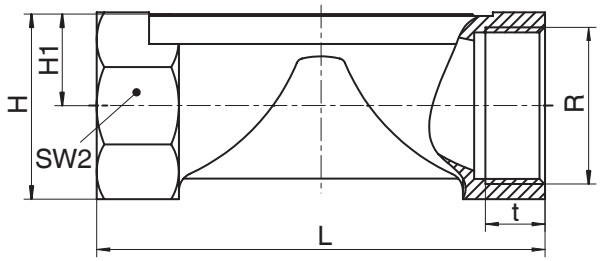


**Connection type threaded socket NPT (code 31) [1], investment casting material (code 37) [2]**

| | MG | DN | NPS | H | H1 | L | n | R | SW 2 | t |
|---|---|---|---|---|---|---|---|---|---|---|
| **GEMÜ 671** | **25** | **15** | **1/2"** | 28.3 | 14.8 | 85.0 | 6.0 | NPT 1/2 | 27.0 | 14.0 |
| | | **20** | **3/4"** | 33.3 | 17.3 | 85.0 | 6.0 | NPT 3/4 | 32.0 | 14.0 |
| | | **25** | **1"** | 42.3 | 21.8 | 110.0 | 6.0 | NPT 1 | 41.0 | 17.0 |
| | **40** | **32** | **1¼"** | 51.3 | 26.3 | 120.0 | 8.0 | NPT 1¼ | 50.0 | 17.0 |
| | | **40** | **1½"** | 56.3 | 28.8 | 140.0 | 8.0 | NPT 1½ | 55.0 | 17.0 |
| | **50** | **50** | **2"** | 71.3 | 36.3 | 165.0 | 8.0 | NPT 2 | 70.0 | 18.0 |

**Connection type threaded socket NPT (code 31) [1], SG iron material (code 90) [2]**

| | MG | DN | NPS | H | H1 | L | n | R | SW 2 | t |
|---|---|---|---|---|---|---|---|---|---|---|
| **GEMÜ 671** | **25** | **15** | **1/2"** | 32.7 | 16.7 | 85.0 | 6 | NPT 1/2 | 32 | 13.6 |
| | | **20** | **3/4"** | 42.0 | 21.5 | 85.0 | 6 | NPT 3/4 | 41 | 14.1 |
| | | **25** | **1"** | 46.7 | 23.7 | 110.0 | 6 | NPT 1 | 46 | 16.8 |
| | **40** | **32** | **1¼"** | 56.0 | 28.5 | 120.0 | 6 | NPT 1¼ | 55 | 17.3 |
| | | **40** | **1½"** | 66.0 | 33.5 | 140.0 | 6 | NPT 1½ | 65 | 17.3 |
| | **50** | **50** | **2"** | 76.0 | 38.5 | 165.0 | 6 | NPT 2 | 75 | 17.7 |

Dimensions in mm
MG = diaphragm size
n = number of flats

1) **Connection type**
Code 31: NPT female thread

2) **Valve body material**
Code 37: 1.4408, investment casting
Code 90: EN-GJS-400-18-LT (GGG 40.3)

## *Threaded spigot DIN (code 6)*

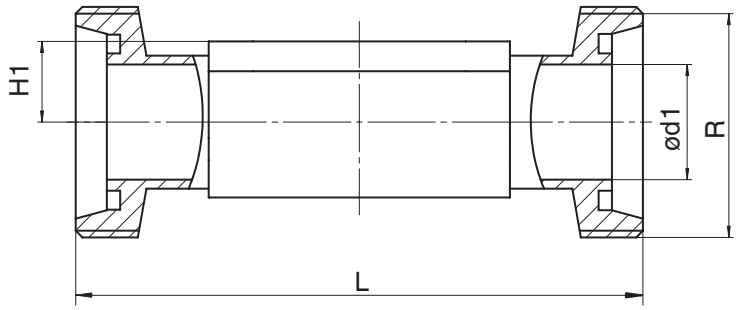


**Connection type threaded spigot DIN (code 6) [1], forged material (code 40, 42) [2]**

| | MG | DN | NPS | ød1 | H1 | L | R |
|---|---|---|---|---|---|---|---|
| **GEMÜ 611** | **10** | **10** | **3/8"** | 10.0 | 12.5 | 118.0 | Rd 28 x 1/8 |
| | | **15** | **1/2"** | 16.0 | 12.5 | 118.0 | Rd 34 x 1/8 |
| **GEMÜ 671** | **25** | **15** | **1/2"** | 16.0 | 19.0 | 118.0 | Rd 34 x 1/8 |
| | | **20** | **3/4"** | 20.0 | 19.0 | 118.0 | Rd 44 x 1/6 |
| | | **25** | **1"** | 26.0 | 19.0 | 128.0 | Rd 52 x 1/6 |
| | **40** | **32** | **1¼"** | 32.0 | 26.0 | 147.0 | Rd 58 x 1/6 |
| | | **40** | **1½"** | 38.0 | 26.0 | 160.0 | Rd 65 x 1/6 |
| | **50** | **50** | **2"** | 50.0 | 32.0 | 191.0 | Rd 78 x 1/6 |
| | **80** | **65** | **2½"** | 66.0 | 62.0 | 246.0 | Rd 95 x 1/6 |
| | | **80** | **3"** | 81.0 | 62.0 | 256.0 | Rd 110 x 1/4 |

Dimensions in mm
MG = diaphragm size

1) **Connection type**
Code 6: Threaded spigot DIN 11851

2) **Valve body material**
Code 40: 1.4435 (F316L), forged body
Code 42: 1.4435 (BN2), forged body, Δ Fe < 0.5%

## *Cone spigot DIN (code 6K)*

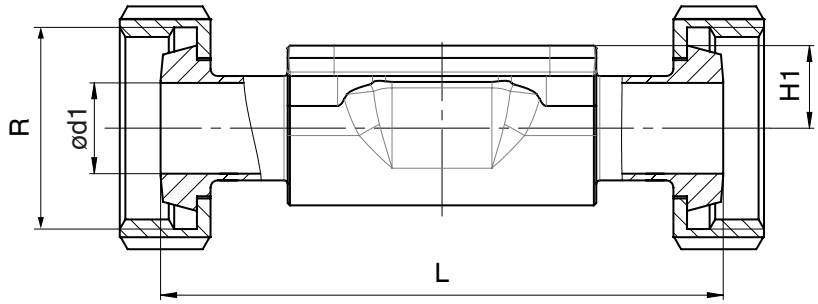


**Connection type cone spigot DIN (code 6K) [1], forged material (code 40, 42) [2]**

| | MG | DN | NPS | ød1 | H1 | L | R |
|---|---|---|---|---|---|---|---|
| **GEMÜ 611** | **10** | **10** | **3/8"** | 10.0 | 12.5 | 116.0 | Rd 28 x 1/8 |
| | | **15** | **1/2"** | 16.0 | 12.5 | 116.0 | Rd 34 x 1/8 |
| **GEMÜ 671** | **25** | **15** | **1/2"** | 16.0 | 19.0 | 116.0 | Rd 34 x 1/8 |
| | | **20** | **3/4"** | 20.0 | 19.0 | 114.0 | Rd 44 x 1/6 |
| | | **25** | **1"** | 26.0 | 19.0 | 127.0 | Rd 52 x 1/6 |
| | **40** | **32** | **1¼"** | 32.0 | 26.0 | 147.0 | Rd 58 x 1/6 |
| | | **40** | **1½"** | 38.0 | 26.0 | 160.0 | Rd 65 x 1/6 |
| | **50** | **50** | **2"** | 50.0 | 32.0 | 191.0 | Rd 78 x 1/6 |
| | **80** | **65** | **2½"** | 66.0 | 62.0 | 246.0 | Rd 95 x 1/6 |
| | | **80** | **3"** | 81.0 | 62.0 | 256.0 | Rd 110 x 1/4 |

Dimensions in mm
MG = diaphragm size

1) **Connection type**
Code 6K: Cone spigot and union nut DIN 11851

2) **Valve body material**
Code 40: 1.4435 (F316L), forged body
Code 42: 1.4435 (BN2), forged body, Δ Fe < 0.5%

## *Flange EN (code 8)*

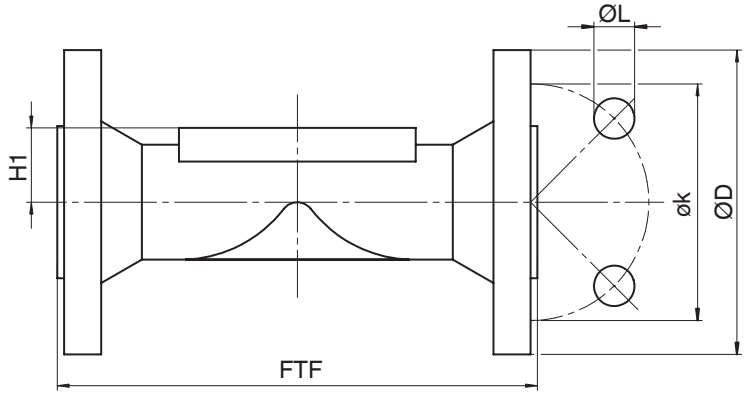


**Connection type flange, length EN 558 (code 8) [1], SG iron material (code 17, 18), investment casting material (code 39, C3), forged material (code 40, 42) [2]**

| | MG | DN | NPS | øD | FTF | | | H1 | | | øk | øL | n |
|---|---|---|---|---|---|---|---|---|---|---|---|---|---|
| | | | | | Material | | | Material | | | | | |
| | | | | | 17, 18, 39 | C3 | 40, 42 | 17, 18, 39 | C3 | 40, 42 | | | |
| **GEMÜ 671** | **25** | **15** | **1/2"** | 95.0 | 130.0 | 150.0 | 130.0 | 18.0 | 13.0 | 19.0 | 65.0 | 14.0 | 4 |
| | | **20** | **3/4"** | 105.0 | 150.0 | 150.0 | 150.0 | 20.5 | 16.0 | 19.0 | 75.0 | 14.0 | 4 |
| | | **25** | **1"** | 115.0 | 160.0 | 160.0 | 160.0 | 23.0 | 19.0 | 19.0 | 85.0 | 14.0 | 4 |
| | **40** | **32** | **1¼"** | 140.0 | 180.0 | 180.0 | 180.0 | 28.7 | 24.0 | 26.0 | 100.0 | 19.0 | 4 |
| | | **40** | **1½"** | 150.0 | 200.0 | 200.0 | 200.0 | 33.0 | 26.0 | 26.0 | 110.0 | 19.0 | 4 |
| | **50** | **50** | **2"** | 165.0 | 230.0 | 230.0 | 230.0 | 39.0 | 32.0 | 32.0 | 125.0 | 19.0 | 4 |
| | **80** | **65** | **2½"** | 185.0 | - | - | 290.0 | - | - | 62.0 | 145.0 | 19.0 | 4 |
| | | **80** | **3"** | 200.0 | 310.0 | - | 310.0 | 59.5 | - | 62.0 | 160.0 | 19.0 | 8 |
| | **100** | **100** | **4"** | 220.0 | 350.0 | - | 350.0 | 73.0 | - | 76.0 | 180.0 | 19.0 | 8 |

Dimensions in mm
MG = diaphragm size
n = number of bolts

1) **Connection type**
Code 8: Flange EN 1092, PN 16, form B, face-to-face dimension FTF EN 558 series 1, ISO 5752, basic series 1, length only for body configuration D

2) **Valve body material**
Code 17: EN-GJS-400-18-LT (GGG 40.3), PFA lined
Code 18: EN-GJS-400-18-LT (GGG 40.3), PP lined
Code 39: 1.4408, PFA lined
Code 40: 1.4435 (F316L), forged body
Code 42: 1.4435 (BN2), forged body, Δ Fe < 0.5%
Code C3: 1.4435, investment casting

## *Flange ANSI Class (code 38, 39)*

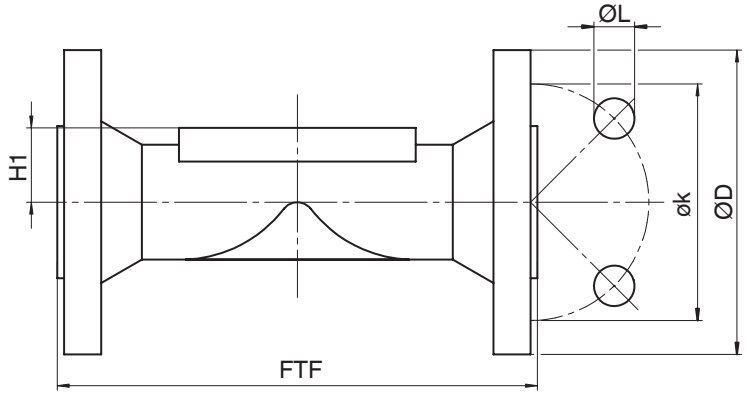


**Connection type flange, length MSS SP-88 (code 38) [1], SG iron material (code 17, 18), investment casting material (code 39) [2]**

| | MG | DN | NPS | øD | FTF | H1 | øk | øL | n |
|---|---|---|---|---|---|---|---|---|---|
| **GEMÜ 671** | **25** | **20** | **3/4"** | 100.0 | 146.0 | 20.5 | 69.9 | 15.9 | 4 |
| | | **25** | **1"** | 110.0 | 146.0 | 23.0 | 79.4 | 15.9 | 4 |
| | **40** | **40** | **1½"** | 125.0 | 175.0 | 33.0 | 98.4 | 15.9 | 4 |
| | **50** | **50** | **2"** | 150.0 | 200.0 | 39.0 | 120.7 | 19.0 | 4 |
| | **80** | **80** | **3"** | 190.0 | 260.0 | 59.5 | 152.4 | 19.0 | 4 |
| | **100** | **100** | **4"** | 230.0 | 327.0 | 73.0 | 190.5 | 19.0 | 8 |

Dimensions in mm
MG = diaphragm size
n = number of bolts

1) **Connection type**
Code 38: Flange ANSI Class 150 RF, face-to-face dimension FTF MSS SP-88, length only for body configuration D

2) **Valve body material**
Code 17: EN-GJS-400-18-LT (GGG 40.3), PFA lined
Code 18: EN-GJS-400-18-LT (GGG 40.3), PP lined
Code 39: 1.4408, PFA lined

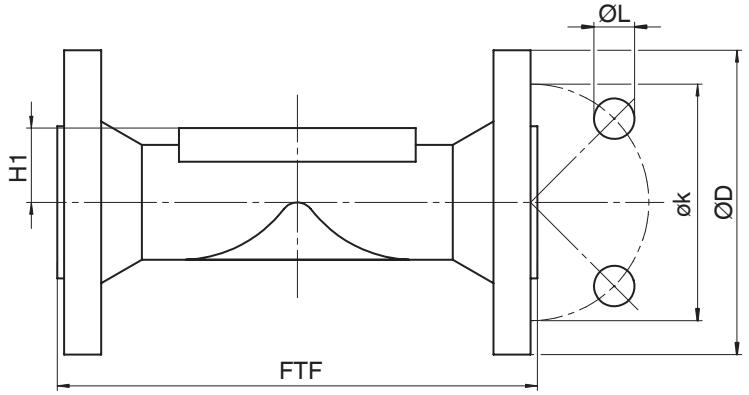


**Connection type flange, length EN 558 (code 39) [1], SG iron material (code 17, 18), investment casting material (code 39, C3), forged material (code 40, 42) [2]**

| | MG | DN | NPS | øD | FTF | | | H1 | | | øk | øL | n |
|---|---|---|---|---|---|---|---|---|---|---|---|---|---|
| | | | | | Material | | | Material | | | | | |
| | | | | | 17, 18, 39 | C3 | 40, 42 | 17, 18, 39 | C3 | 40, 42 | | | |
| **GEMÜ 671** | **25** | **15** | **1/2"** | 90.0 | 130.0 | 130.0 | 130.0 | 18.0 | 13.0 | 19.0 | 60.3 | 15.9 | 4 |
| | | **20** | **3/4"** | 100.0 | 150.0 | 150.0 | 150.0 | 20.5 | 16.0 | 19.0 | 69.9 | 15.9 | 4 |
| | | **25** | **1"** | 110.0 | 160.0 | 160.0 | 160.0 | 23.0 | 19.0 | 19.0 | 79.4 | 15.9 | 4 |
| | **40** | **32** | **1¼"** | 115.0 | 180.0 | 180.0 | 180.0 | 28.7 | 24.0 | 26.0 | 88.9 | 15.9 | 4 |
| | | **40** | **1½"** | 125.0 | 200.0 | 200.0 | 200.0 | 33.0 | 26.0 | 26.0 | 98.4 | 15.9 | 4 |
| | **50** | **50** | **2"** | 150.0 | 230.0 | 230.0 | 230.0 | 39.0 | 32.0 | 32.0 | 120.7 | 19.0 | 4 |
| | **80** | **65** | **2½"** | 180.0 | - | - | 290.0 | - | - | 62.0 | 139.7 | 19.0 | 4 |
| | | **80** | **3"** | 190.0 | 310.0 | - | 310.0 | 59.5 | - | 62.0 | 152.4 | 19.0 | 4 |
| | **100** | **100** | **4"** | 230.0 | 350.0 | - | 350.0 | 73.0 | - | 76.0 | 190.5 | 19.0 | 8 |

Dimensions in mm
MG = diaphragm size
n = number of bolts

1) **Connection type**
Code 39: Flange ANSI Class 125/150 RF, face-to-face dimension FTF EN 558 series 1, ISO 5752, basic series 1, length only for body configuration D

2) **Valve body material**
Code 17: EN-GJS-400-18-LT (GGG 40.3), PFA lined
Code 18: EN-GJS-400-18-LT (GGG 40.3), PP lined
Code 39: 1.4408, PFA lined
Code 40: 1.4435 (F316L), forged body
Code 42: 1.4435 (BN2), forged body, Δ Fe < 0.5%
Code C3: 1.4435, investment casting

## *Clamp (code 80, 82, 88, 8A, 8E, 8P, 8T)*

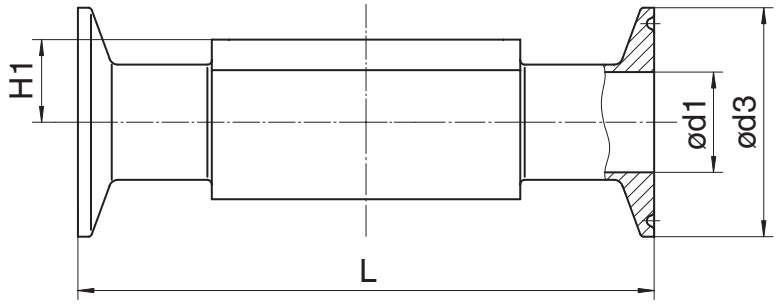


**Connection type clamp DIN/ASME (code 80, 88, 8P, 8T) [1], forged material (code 40, 42, F4) [2]**

| | MG | DN | NPS | ød1 | | ød3 | | H1 | L | |
|---|---|---|---|---|---|---|---|---|---|---|
| | | | | Connection type | | Connection type | | | Connection type | |
| | | | | 80, 8P | 88, 8T | 80, 8P | 88, 8T | | 80, 8P | 88, 8T |
| **GEMÜ 611** | **10** | **15** | **1/2"** | 9.40 | 940 | 25.0 | 25.0 | 12.5 | 88.9 | 108.0 |
| | | **20** | **3/4"** | 15.75 | 15.75 | 25.0 | 25.0 | 12.5 | 101.6 | 117.0 |
| **GEMÜ 671** | **25** | **20** | **3/4"** | 15.75 | 15.75 | 25.0 | 250 | 19.0 | 101.6 | 117.0 |
| | | **25** | **1"** | 22.10 | 22.10 | 50.5 | 50.5 | 19.0 | 114.3 | 127.0 |
| | **40** | **40** | **1½"** | 34.80 | 34.80 | 50.5 | 50.5 | 26.0 | 139.7 | 159.0 |
| | **50** | **50** | **2"** | 47.50 | 47.50 | 64.0 | 64.0 | 32.0 | 158.8 | 190.0 |
| | | **65** | **2½"** | 60.20 | 60.20 | 77.5 | 77.5 | 34.0 | 193.8 | 216.0 |
| | **80** | **65** | **2½"** | 60.20 | 60.20 | 77.5 | 77.5 | 62.0 | 193.8 | 216.0 |
| | | **80** | **3"** | 72.90 | 72.90 | 91.0 | 91.0 | 62.0 | 222.3 | 254.0 |
| | **100** | **100** | **4"** | 97.38 | 97.38 | 119.0 | 119.0 | 76.0 | 292.1 | 305.0 |

Dimensions in mm
MG = diaphragm size

1) **Connection type**
Code 80: Clamp ASME BPE, face-to-face dimension FTF ASME BPE, length only for body configuration D
Code 88: Clamp ASME BPE, for pipe ASME BPE, face-to-face dimension FTF EN 558 series 7, length only for body configuration D
Code 8P: Clamp DIN 32676 series C, face-to-face dimension FTF ASME BPE, length only for body configuration D
Code 8T: Clamp DIN 32676 series C, face-to-face dimension FTF EN 558 series 7, length only for body configuration D

2) **Valve body material**
Code 40: 1.4435 (F316L), forged body
Code 42: 1.4435 (BN2), forged body, Δ Fe < 0.5%
Code F4: 1.4539, forged body

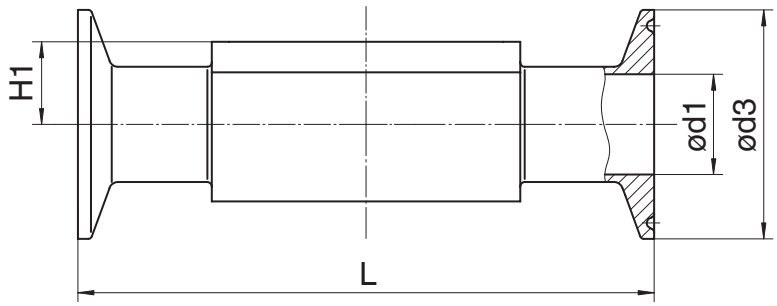


**Connection type clamp DIN/ISO (code 82, 8A, 8E) [1], forged material (code 40, 42, F4) [2]**

| | MG | DN | NPS | ød1 | | | ød3 | | | H1 | L | | |
|---|---|---|---|---|---|---|---|---|---|---|---|---|---|
| | | | | Connection type | | | Connection type | | | | Connection type | | |
| | | | | 82 | 8A | 8E | 82 | 8A | 8E | | 82 | 8A | 8E |
| **GEMÜ 611** | **10** | **10** | **3/8"** | 14.0 | 10.0 | - | 25.0 | 34.0 | - | 12.5 | 108.0 | 108.0 | - |
| | | **15** | **1/2"** | 18.1 | 16.0 | - | 50.5 | 34.0 | - | 12.5 | 108.0 | 108.0 | - |
| **GEMÜ 671** | **25** | **15** | **1/2"** | 18.1 | 16.0 | - | 50.5 | 34.0 | - | 19.0 | 108.0 | 108.0 | - |
| | | **20** | **3/4"** | 23.7 | 20.0 | - | 50.5 | 34.0 | - | 19.0 | 117.0 | 117.0 | - |
| | | **25** | **1"** | 29.7 | 26.0 | 22.6 | 50.5 | 50.5 | 50.5 | 19.0 | 1270 | 127.0 | 127.0 |
| | **40** | **32** | **1¼"** | 38.4 | 32.0 | 31.3 | 64.0 | 50.5 | 50.5 | 26.0 | 146.0 | 146.0 | 146.0 |
| | | **40** | **1½"** | 44.3 | 38.0 | 35.6 | 64.0 | 50.5 | 50.5 | 26.0 | 159.0 | 159.0 | 159.0 |
| | **50** | **50** | **2"** | 56.3 | 50.0 | 48.6 | 77.5 | 64.0 | 64.0 | 32.0 | 190.0 | 190.0 | 190.0 |
| | | **65** | **2½"** | - | - | 60.3 | - | - | 77.5 | 34.0 | - | - | 216.0 |
| | **80** | **65** | **2½"** | 72.1 | 66.0 | 60.3 | 91.0 | 91.0 | 77.5 | 62.0 | 216.0 | 216.0 | 216.0 |
| | | **80** | **3"** | 84.3 | 81.0 | 72.9 | 106.0 | 106.0 | 91.0 | 62.0 | 254.0 | 254.0 | 254.0 |
| | **100** | **100** | **4"** | 109.7 | 100.0 | 97.6 | 130.0 | 119.0 | 119.0 | 76.0 | 305.0 | 305.0 | 305.0 |

Dimensions in mm
MG = diaphragm size

1) **Connection type**
Code 82: Clamp DIN 32676 series B, face-to-face dimension FTF EN 558 series 7, length only for body configuration D
Code 8A: Clamp DIN 32676 series A, face-to-face dimension FTF acc. to EN 558 series 7, length only for body configuration D
Code 8E: Clamp ISO 2852 for pipe ISO 2037, clamp SMS 3017 for pipe SMS 3008 face-to-face dimension FTF EN 558 series 7, length only for body configuration D

2) **Valve body material**
Code 40: 1.4435 (F316L), forged body
Code 42: 1.4435 (BN2), forged body, Δ Fe < 0.5%
Code F4: 1.4539, forged body

GEMÜ Gebr. Müller Apparatebau GmbH & Co. KG
Fritz-Müller-Straße 6-8, 74653 Ingelfingen-Criesbach, Germany
Phone +49 (0) 7940 1230 · info@gemue.de
www.gemu-group.com

Subject to alteration | 01.2023 | 88325819