GEMÜ 8303

Electrically operated pilot solenoid valve

Features

- Optional installation position
- Simple coil replacement without tools (Click-on®)
- The solenoid can be replaced without removing the valve body from the piping
- Standard silenced venting

Description

The GEMÜ 8303 3/2-way pilot solenoid valve requires differential pressure. The housing is made from aluminium or stainless steel. The plastic encapsulated coil is detachable.

Technical specifications

- **Media temperature :** -10 to 60 °C
- **Ambient temperature:** -10 to 60 °C
- **Operating pressure :** 1 to 10 bar
- **Nominal size:** DN 2
- **Electrical connection types:** Plug, design A
- **Supply voltages:** 110 V AC, 50 Hz I 230 V AC, 50 Hz I 24 V AC, 50 Hz I 24 V DC
- **Connection types:** Threaded connection
- **Connection standards:** DIN
- **Body materials:** 1.4581 I Aluminium
- **Conformities:** ATEX I EAC

Technical data depends on the respective configuration

further information
webcode: GW-8303 002

Product line

	GEMÜ 0322	**GEMÜ 0324**	**GEMÜ 0326**	**GEMÜ 8303**	**GEMÜ 8357**	**GEMÜ 8458**	**GEMÜ 8500**	**GEMÜ 8506**
Media temperature	-10 to 50 °C	-10 to 50 °C	-10 to 50 °C	-10 to 60 °C	-10 to 60 °C	-10 to 50 °C	-10 to 60 °C	-10 to 50 °C
Ambient temperature	-10 to 50 °C	-10 to 50 °C	-10 to 50 °C	-10 to 60 °C	-10 to 60 °C	-10 to 50 °C	-10 to 60 °C	-10 to 50 °C
Operating pressure	0 to 10 bar	0 to 10 bar	0 to 10 bar	1 to 10 bar	1 to 10 bar	1 to 10 bar	2,5 to 10 bar	2 to 8 bar
Nominal sizes	DN 2	DN 2	DN 2	DN 2	DN 6	DN 6	DN 7	DN 6
Electrical connection type								
Plug, design A	●	●	●	●	●	-	-	●
Plug, design B	-	-	-	-	-	-	●	-
M12 plug	●	●	●	-	-	-	-	-
Voltage								
110 V AC, 50 Hz	-	-	-	●	-	-	-	●
110 V AC, 50/60 Hz	-	-	-	-	-	-	●	-
12 V DC	-	-	-	-	-	-	●	-
120 V AC, 50/60 Hz	●	●	●	-	-	-	-	-
230 V AC, 50 Hz	-	-	-	●	●	●	-	●
230 V AC, 50/60 Hz	●	●	●	-	-	-	●	-
24 V AC, 50 Hz	-	-	-	●	●	●	-	●
24 V AC, 50/60 Hz	●	●	●	-	-	-	●	-
24 V DC	●	●	●	●	●	●	●	●
Connection types								
Threaded connection	●	●	●	●	●	●	●	●
Body material								
1.4581	-	-	-	●	-	-	-	-
Aluminium	-	-	-	●	●	●	●	●
PA	●	●	●	-	-	-	-	-
Conformities								
ATEX	●	●	●	●	-	-	●	-
EAC	●	●	●	●	●	●	-	●
Functional safety	●	●	●	-	-	-	●	-

Product description

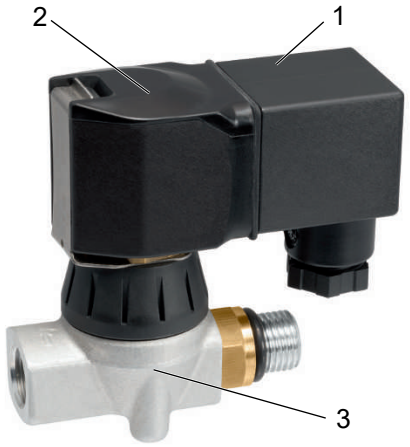

Item	Name	Materials
1	Plug	PA
2	Coil housing	PA 6
3	Valve body	3.2315, AlMgSi1/AlSi1MgMn 1.4581, stainless steel
	Seal materials	NBR

Order data

The order data provide an overview of standard configurations.

Please check the availability before ordering. Other configurations available on request.

Order codes

1 Type	Code
Pilot solenoid valve,directly controlled	8303

2 DN	Code
DN 2	002

3 Body configuration	Code
Multi-port version	M

4 Connection type	Code
Threaded socket DIN ISO 228	1

5 Valve body material	Code
3.2315, AlMgSi1/AlSi1MgMn	14
1.4581, stainless steel	38

6 Seal material	Code
NBR	2

7 Control function	Code
Normally closed (NC)	1

8 Voltage	Code
24 V	24
110 V	110
230 V	230

9 Frequency	Code
DC	DC
50 Hz	50

10 Special version	Code
Without	
ATEX version	X

Order example

Ordering option	Code	Description
1 Type	8303	Pilot solenoid valve,directly controlled
2 DN	002	DN 2
3 Body configuration	M	Multi-port version
4 Connection type	1	Threaded socket DIN ISO 228
5 Valve body material	14	3.2315, AlMgSi1/AlSi1MgMn
6 Seal material	2	NBR
7 Control function	1	Normally closed (NC)
8 Voltage	230	230 V
9 Frequency	50/60	50 - 60 Hz
10 Special version		Without

Technische Daten

Medium

Working medium: Filtered, lubricated or unlubricated compressed air which has no negative impact on the physical and chemical properties of the valve body and seal material.

Temperature

Media temperature: -10 — 60 °C

Storage temperature: 0 — 40 °C

Pressure

Operating pressure: 1 — 10 bar

Flow rate: 82 Nl/min

Produktkonformitäten

Explosion protection: ATEX (2014/34/EU), order code Special version X

ATEX marking: Gas: Ⓔx II 2G Ex eb mb IIC T4 Gb
Dust: Ⓔx II 2D Ex mb tb IIIB T125°C-135°C Db

Type examination certificate: PTZ 16 ATEX 0011 X

Approvals: CSA approval

Mechanische Daten

Protection class: IP 65 (with plug)

Weight: 0.4 kg

Elektrische Daten

Power consumption:

AC operation:	Pull in Hold in	15 VA 12 VA
DC operation:		8 W

Switching times:
ON: 8.5 ms
OFF: 30.4 ms

Permissible voltage tolerance: ±10 % to VDE 0580

Duty cycle: Continuous duty

Dimensions

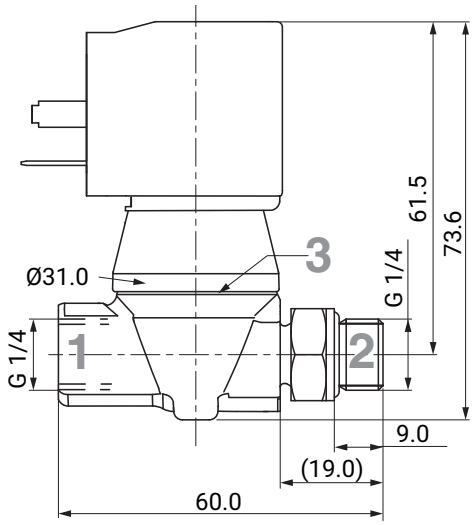

Dimensions in mm

Electrical connection

Connection diagram for plug design A (DIN EN 175301-803)

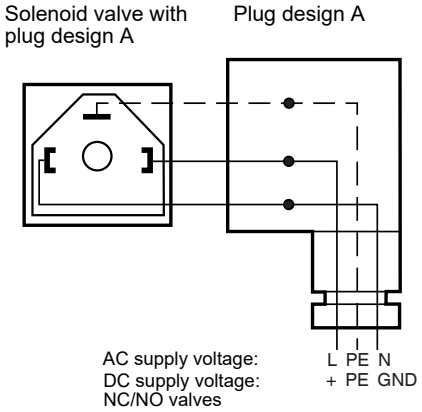

Accessories

GEMÜ 2026

Plug

GEMÜ 2026 are plugs with lights, with or without interference suppression. Various versions available. The DC voltage version with a bridge rectifier has a plug with reverse battery protection. The scope of supply comprises a gasket made from NBR and a M3x35 central screw

Ordering information

Designation	Design	Item
2026000Z AM1600S2 2C1	24V DC, M16, suppressor diode, 2-pin	88668463
2026000Z AM16G0S2 2C1	24V DC, M16, green LED, suppressor diode, 2-pin	88668468
2026000Z AM16GBV2 2C1	24V DC, M16, green LED, bridge rectifier, varistor, 2-pin	88668469
2026000Z AM16GBS2 2C1	24V DC, M16, green LED, bridge rectifier, suppressor diode, 2-pin	88668470
2026000Z AM16G002 2C1	24V DC, M16, green LED, 2-pin	88668471
2026000Z AM16G0V2 2C1	24V DC, M16, varistor, green LED, 2-pin	88668473
2026000Z AM160BV2 2L4	230V 50/60Hz, M16, bridge rectifier, varistor, 2-pin	88668464
2026000Z AM160002 2L4	230V 50/60Hz, M16, 2-pin	88668465
2026000Z AM160003 2L4	230V 50/60Hz, M16, 3-pin	88668466
2026000Z AM160002 2L42M	230V 50/60Hz, M16, 2-pin, 2 m cable	88668474
2026000Z AM160002 2L45M	230V 50/60Hz, M16, 2-pin, 5 m cable	88668475
2026000Z AM16Y002 2L4	230V 50/60Hz, M16, yellow LED, 2-pin	88668476
2026000Z AM16Y0S2 2L4	230V 50/60Hz, M16, yellow LED, suppressor diode, 2-pin	88668477
2026000Z AM16GBV2 2L4	230V 50/60Hz, M16, green LED, bridge rectifier, varistor, 2-pin	88668478

GEMÜ Gebr. Müller Apparatebau GmbH & Co. KG
Fritz-Müller-Straße 6-8, 74653 Ingelfingen-Criesbach, Germany
Phone +49 (0) 7940 1230 · info@gemue.de
www.gemu-group.com

Subject to alteration | 12.2022 | 88059313