GEMÜ 8500

Electrically operated pilot solenoid valve

Features

- Optional installation position
- Standard manual override
- Rotatable solenoid coil
- Suitable for activating single or double acting pneumatic actuators
- Available with NAMUR connection as an option

Description

The GEMÜ 8500 servo assisted 3/2 or 5/2-way pilot solenoid valve is indirectly controlled. The body is made of aluminium. The plastic encapsulated coil is detachable. The piston valve has a soft elastomer seal.

Technical specifications

- **Media temperature :** -10 to 60 °C
- **Ambient temperature:** -10 to 60 °C
- **Operating pressure :** 2.5 to 10 bar
- **Nominal size:** DN 7
- **Electrical connection types:** Plug, design B
- **Supply voltages:** 110 V AC, 50/60 Hz I 12 V DC I 230 V AC, 50/60 Hz I 24 V AC, 50/60 Hz I 24 V DC
- **Connection types:** Threaded connection
- **Body materials:** Aluminium
- **Conformities:** ATEX I SIL

Technical data depends on the respective configuration

further information
webcode: GW-8500

Product line

	GEMÜ 0322	GEMÜ 0324	GEMÜ 0326	GEMÜ 8303	GEMÜ 8357	GEMÜ 8458	GEMÜ 8500	GEMÜ 8506
Media temperature	-10 to 50 °C	-10 to 50 °C	-10 to 50 °C	-10 to 60 °C	-10 to 60 °C	-10 to 50 °C	-10 to 60 °C	-10 to 50 °C
Ambient temperature	-10 to 50 °C	-10 to 50 °C	-10 to 50 °C	-10 to 60 °C	-10 to 60 °C	-10 to 50 °C	-10 to 60 °C	-10 to 50 °C
Operating pressure	0 to 10 bar	0 to 10 bar	0 to 10 bar	1 to 10 bar	1 to 10 bar	1 to 10 bar	2,5 to 10 bar	2 to 8 bar
Nominal sizes	DN 2	DN 2	DN 2	DN 2	DN 6	DN 6	DN 7	DN 6
Electrical connection type								
Plug, design A	●	●	●	●	●	-	-	●
Plug, design B	-	-	-	-	-	-	●	-
M12 plug	●	●	●	-	-	-	-	-
Voltage								
110 V AC, 50 Hz	-	-	-	●	-	-	-	●
110 V AC, 50/60 Hz	-	-	-	-	-	-	●	-
12 V DC	-	-	-	-	-	-	●	-
120 V AC, 50/60 Hz	●	●	●	-	-	-	-	-
230 V AC, 50 Hz	-	-	-	●	●	●	-	●
230 V AC, 50/60 Hz	●	●	●	-	-	-	●	-
24 V AC, 50 Hz	-	-	-	●	●	●	-	●
24 V AC, 50/60 Hz	●	●	●	-	-	-	●	-
24 V DC	●	●	●	●	●	●	●	●
Connection types								
Threaded connection	●	●	●	●	●	●	●	●
Body material								
1.4581	-	-	-	●	-	-	-	-
Aluminium	-	-	-	●	●	●	●	●
PA	●	●	●	-	-	-	-	-
Conformities								
ATEX	●	●	●	●	-	-	●	-
EAC	●	●	●	●	●	●	-	●
SIL	-	-	-	-	-	-	●	-

Product description

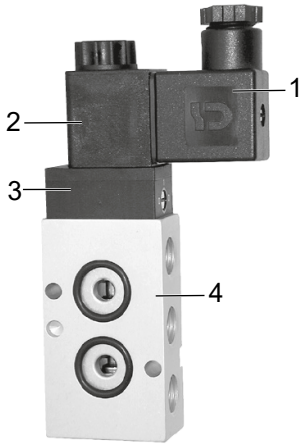

Item	Name	Materials
1	Plug	PA
2	Coil housing	PA
3	Pilot head	PA
4	Valve body	(AlCuMgSn)
	Seal materials	NBR

Order data

The order data provide an overview of standard configurations.

Please check the availability before ordering. Other configurations available on request.

Order codes

1 Type	Code
Pilot valve	8500

2 Way version	Code
3/2-way	32
5/2-way	52

3 NAMUR	Code
Standard	
Flex plate	F
NAMUR	N

4 DN	Code
DN 7	7

5 Body configuration	Code
Multi-port version	M

6 Connection type	Code
Thread G1/4"	G2

7 Valve body material	Code
AA-2015, AlCuMgSn	14

8 Seal material	Code
NBR	2

9 Control function	Code
Combined spring return	1
Pneumatic spring (ATEX)	A

10 Voltage/frequency	Code
12 V DC	B1
24 V DC	C1
24 V/50 - 60 Hz	C4
48 V DC	D1
110 V/50 - 60 Hz	E4
230 V/50 - 60 Hz	L4

11 Special version	Code
Without	
180° rotation	R

12 Special version	Code
Without	
UL approval	U
ATEX version	X

Order example

Ordering option	Code	Description
1 Type	8500	Pilot valve
2 Way version	32	3/2-way
3 NAMUR	N	NAMUR
4 DN	7	DN 7
5 Body configuration	M	Multi-port version
6 Connection type	G2	Thread G1/4"
7 Valve body material	14	AA-2015, AlCuMgSn
8 Seal material	2	NBR
9 Control function	1	Combined spring return
10 Voltage/frequency	C1	24 V DC
11 Special version		Without
12 Special version		Without

Technical data

Medium

Working medium: Filtered, lubricated or unlubricated compressed air which has no negative impact on the physical and chemical properties of the valve body and seal material.

Air quality acc. to ISO 8573-1:2010:7-4-4 for particles, water and oil

Temperature

Media temperature:

AC operation:	-10 to 50 °C
DC operation:	-10 to 60 °C

Pressure

Operating pressure: 2.5 — 10 bar

Flow rate: 1250 Nl/min

Product compliance

Machinery Directive: 2006/42/EC

EMC Directive: 2014/30/EU

Explosion protection: Special version X order code

ATEX marking: Gas: Ⓔx II 2G Ex mb IIC T4/T5 Gb

Dust: Ⓔx II 2D Ex mb tb IIIC T95°C, T130°C Db

Mechanical data

Protection class: IP 65

Installation position: Optional

Weight:

3/2-way standard:	0.21 kg
5/2-way standard:	0.25 kg
3/2-way and 5/2-way NAMUR:	0.26 kg

Electrical data

Power consumption:

AC operation:	5 VA
DC operation:	3 W

Switching times: 20 ms ± 4 ms

Permissible voltage tolerance: ±10 % to VDE 0580

Duty cycle: Continuous duty

Electrical connection type: Plug, design B

Optional: ATEX version with 3 m cable (H05V2V2-F 3G1, external Ø 7 mm)

Wiring note: Special wiring on request. When using electronic switches and additional wiring, carefully design out any potential residual currents upon installation.

Dimensions

Standard version

3/2-way version

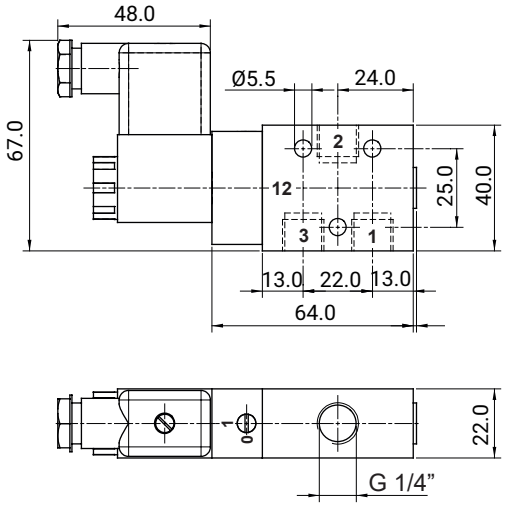

5/2-way version

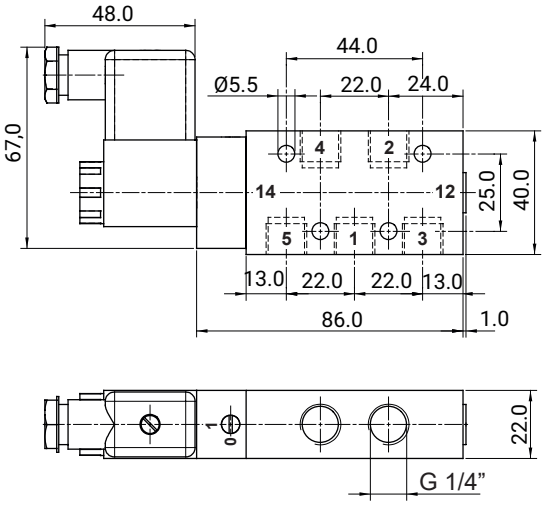

Dimensions in mm

NAMUR version

3/2-way version

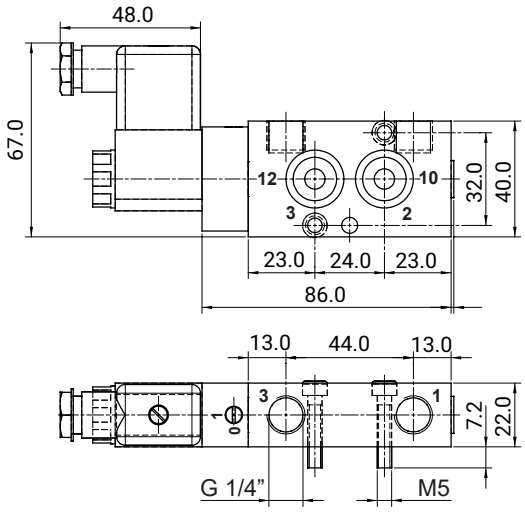

5/2-way version

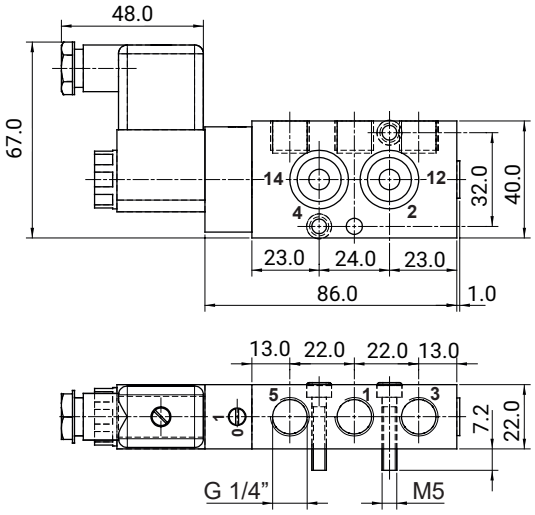

Dimensions in mm

NAMUR flex plate

For 5/2-way design (code 52), NAMUR- standard ¼"

By adding this flex plate, the valve becomes a 3/2 way NAMUR valve with spring chamber ventilation.

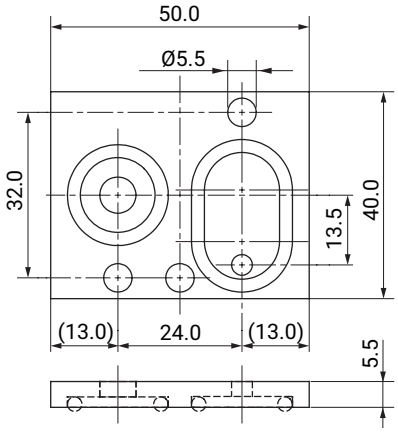

Interlinking system

Individual parts

3/2-way design

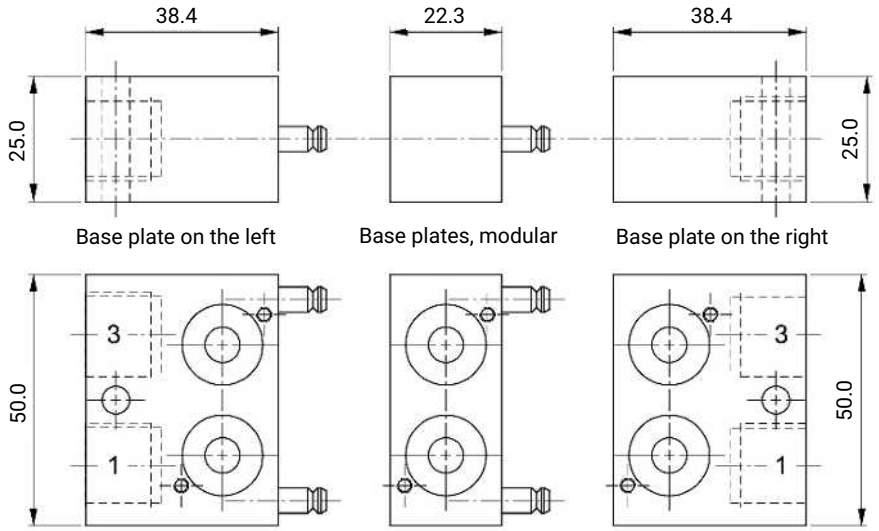

Dimensions in mm

5/2-way design

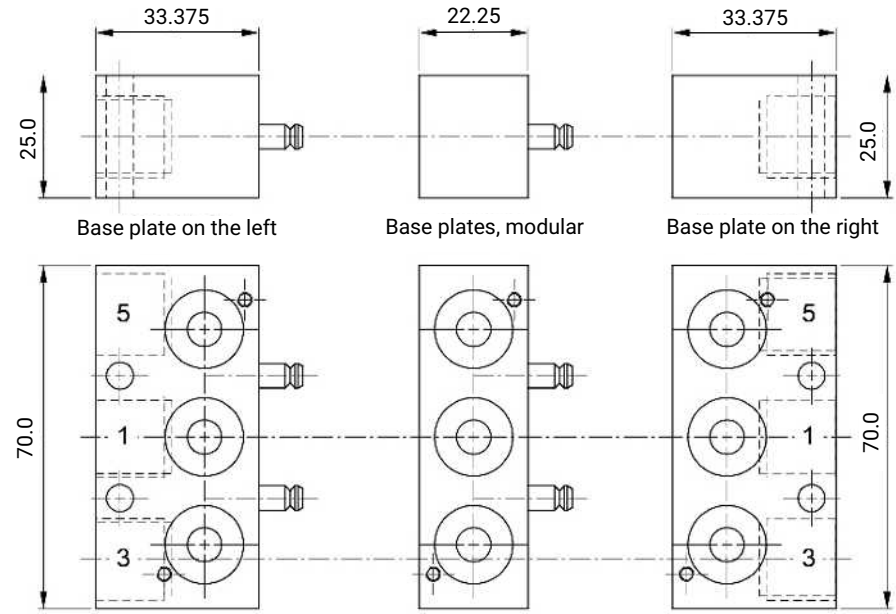

Dimensions in mm

Mounted versions

3/2-way design

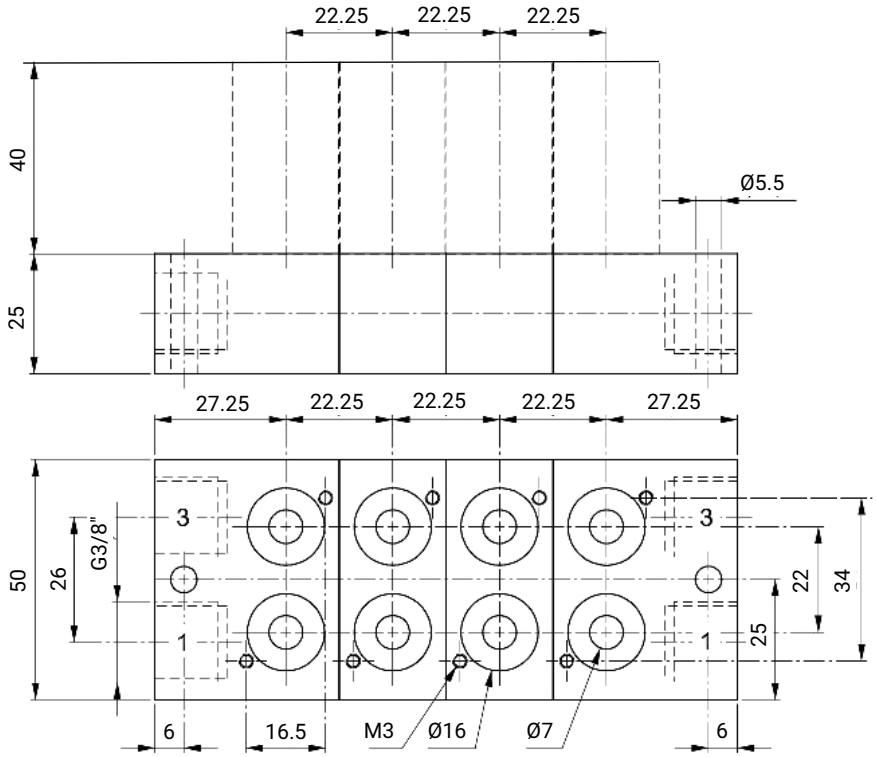

Dimensions in mm

5/2-way design

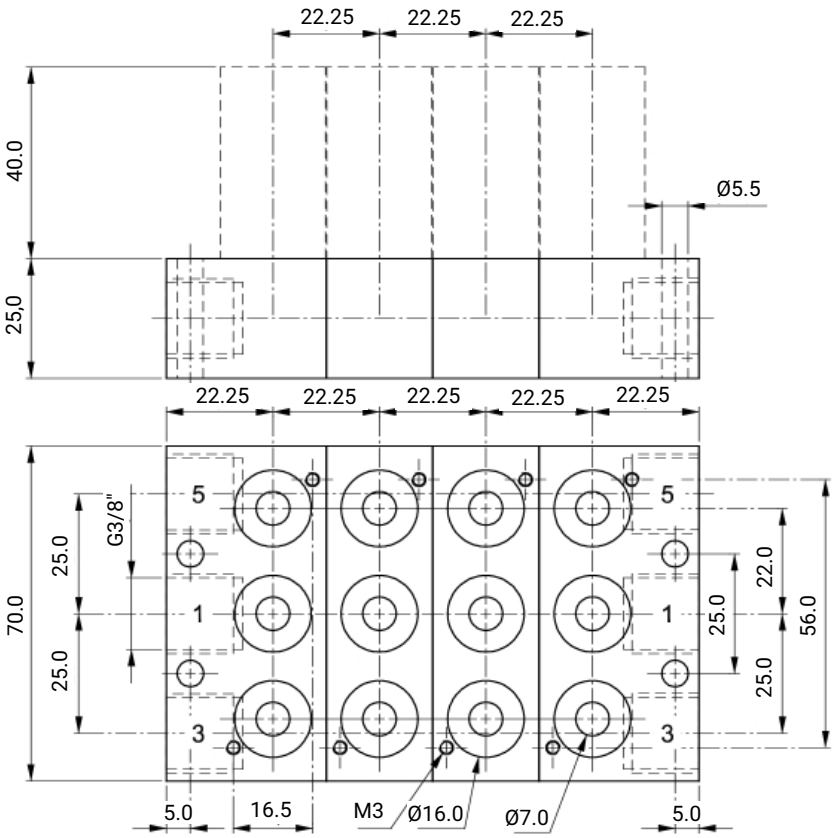

Dimensions in mm

Solenoid

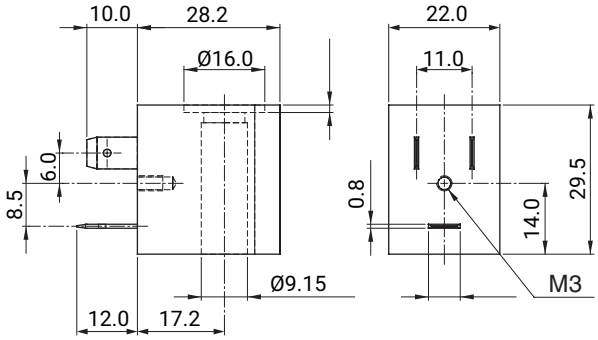

Circuit diagram

3/2-way standard

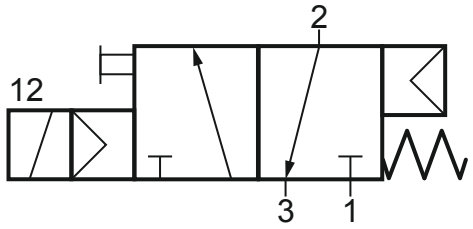

3/2-way NAMUR

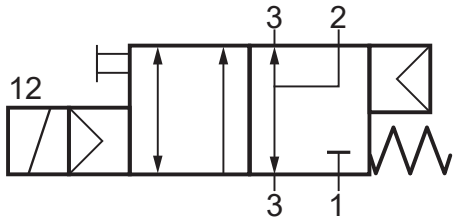

5/2-way standard and NAMUR

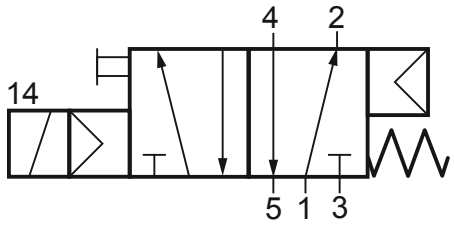

Interlinking system

3/2-way design

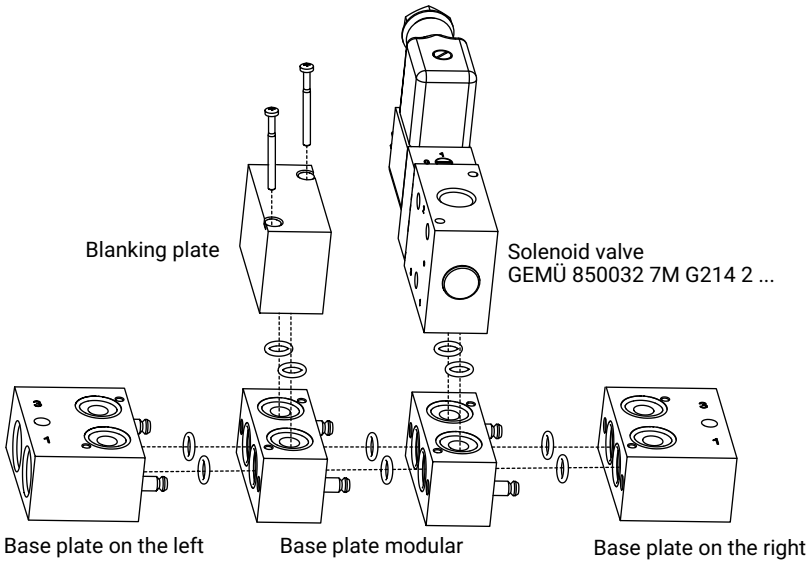

Designation	Item
Base plate on the right, 3/2-way	99115411
Base plate on the left, 3/2-way	99115412
Base plate modular, 3/2-way	99115413
Blanking plate	99115653

5/2-way design

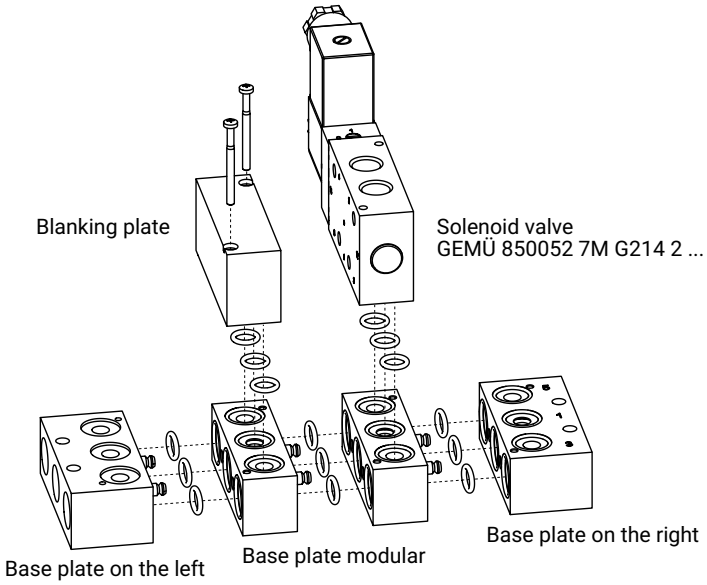

Designation	Item
Base plate on the right, 5/2-way	99115408
Base plate on the left, 5/2-way	99115409
Base plate modular, 5/2-way	99115410
Blanking plate	99115652

Accessories

GEMÜ 2026

Plug

GEMÜ 2026 are plugs with lights, with or without interference suppression. Various versions available. The DC voltage version with a bridge rectifier has a plug with reverse battery protection. The scope of supply comprises a gasket made from NBR and a M3x35 central screw

Ordering information

Type	Item number	Application
2026000ZBIM16 G0S2 2C1	88668472	Plug design B, IND

GEMÜ 1750

Silencer

The GEMÜ 1750 silencer can be used to reduce the noise caused by leaking compressed air. It is available either in brass or plastic.

Ordering information

Type	Item number	Order description
1750*	88387920	1750 000 ZA 214K0K1

* x2 required for 5/2-way design

GEMÜ 2022

Throttle valve

The GEMÜ 2022 throttle valves are available as throttle valve, throttle check valve and dual throttle check valve. In pneumatic actuators they are used to regulate the compressed air depending on the function for the supply or exhaust air and can be set independently of each other in the case of dual throttle check valves.

Ordering information

Type	Item number	Order description
2022*	88011501	2022 000 ZA 214K000D100CG3

* x2 required for 5/2-way design

GEMÜ 8500DRN

Throttle plate

Throttle plates can be used to continuously adjust the travel times of pneumatic quarter turn actuators in both the "OPEN" and "CLOSED" directions independently of one another. They are installed between the NAMUR valve and the quarter turn actuator.

Ordering information

Type	Item number	Application
#P02 514 PN10 10 #000K	99044541	3/2-way NAMUR throttle plate
#P02 514 PN10 10 #000M	99044545	5/2-way NAMUR throttle plate

GEMÜ Gebr. Müller Apparatebau GmbH & Co. KG
Fritz-Müller-Straße 6-8, 74653 Ingelfingen-Criesbach, Germany
Phone +49 (0) 7940 1230 · info@gemue.de
www.gemu-group.com

Subject to alteration | 08.2022 | 88601168